MONOGRAM 30" BUILT-IN SINGLE OVEN

ZTS90DPSZSS

DIGITAL RECIPE BOX

Elevate your culinary creativity with the digital recipe box, allowing you to save your favorite recipes directly to the oven screen or your smartphone app. Store recipes from popular food websites or upload photos of your handwritten recipes for effortless access and organization.

BRILLIANT 7" LCD DISPLAY

Easily adjust oven settings on a vibrant, customizable display that allows you to upload personal photos, check weather updates, manage multiple timers, maintain a shared shopping list and sync family calendars.

INTEGRATED COOKING CONTENT

Discover recipe inspiration and culinary tips from trusted culinary partners like King Arthur Baking, with guided recipes and cooking tutorials that help you build culinary confidence and make the most of your oven.

VOICE CONTROL

Benefit from the convenience of voice control through Alexa or Google Home. Once programmed, you can use your voice to preheat the oven and more, all without raising a finger.

SLOW ROAST MODE

Create flavorful meals with a new Slow Cook mode that uses low, steady heat to gently cook soups, stews and braised dishes right in your oven.

PRECISION COOKING MODES

Master new recipes and perfectly execute favorite dishes from prime rib to salmon using this ultra-smart system that automatically tracks cooking progress, modifies temperatures and adjusts cooking times.

NO PREHEAT AIR FRY

A must-have for health-conscious cooks, the No-Preheat Air Fry mode crisps food to crunchy perfection, without using oils or butter.

WIFI POWERED BY SMARTHQ

Enhance your Monogram wall oven and simplify daily life with seamless remote access, real-time alerts, and over-the-air updates designed to keep performance at its peak.

EXCLUSIVE NICKEL OVEN RACKS

Glide in and out smoothly on stainless steel ball bearings.

TWIN CONVECTION WITH DIRECT AIR

Achieve beautifully cooked and delicious meals every time with this expertly designed, third heating element and fan combination.

TEN PASS BAKE AND BROIL ELEMENTS

Evenly bakes and browns dishes of all types and sizes

OPTIMIZED CLEANING

Self-clean and Steam clean options offer flexibility for thorough oven cleaning

MONOGRAM

SPECIFICATIONS

Overall Width	29 3/4" (75.6 cm)
Overall Height	28 11/16" (728 cm)
Overall Depth Including Handle	27 5/16" (70.6 cm)
Oven Door Clearance	20 9/16" (52.2 cm)
Overall Oven Interior Capacity	5.0 cu. ft. (141.6 liters)
Oven Interior Dimensions (W x H x D)	25" x 17 3/8" x 20 1/4" (63.5 x 44.1 x 51.4 cm)
Minimum Cabinet Width*	30" (76.2 cm)
Minimum Cabinet Depth*	24" (61.0 cm)
Minimum Base Support	220 lbs. (99 kg)
Cutout Width*	28 1/2" (72.4 cm) Min 28 5/8" (72.7 cm) Max
Cutout Height*	27 1/4" (69.2 cm) Min 27 5/16" (69.4 cm) Max
Cutout Depth*	23 1/2" (59.7 cm) Min
Volts/Hertz/Amps	240/208 V AC, 60 Hz, 20A
Conduit Length	48" (72" available special order: WB18T10398)
Electrical Rating	3.4 kW at 208V 4.5 kW at 240V
Shipping Weight	184 lbs. (84 kg)

* Additional space will be needed for flush installation.

ATTENTION ELECTRICIAN:

A 240/208V, 60Hz, 20 Amp circuit is required. An individual properly grounded branch circuit or circuit breaker is required. Hardware junction box is required for built-in product.

OVERALL DIMENSIONS

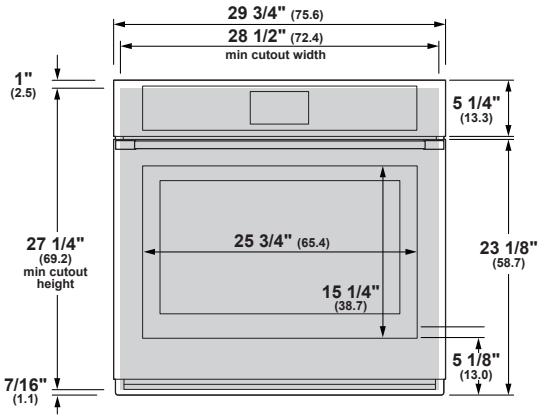

FRONT VIEW (SHOWING CUTOUT OVERLAP)

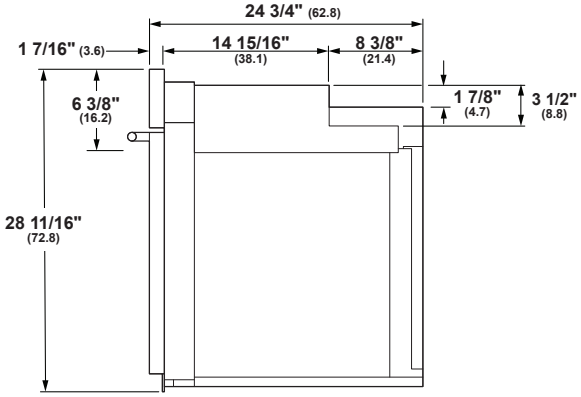

SIDE VIEW

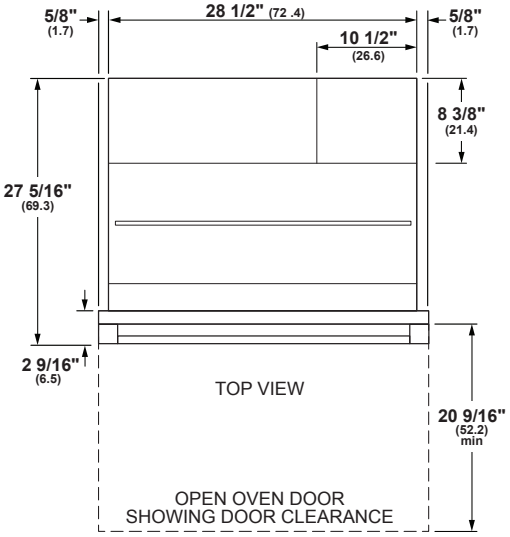

TOP VIEW

OPEN OVEN DOOR
SHOWING DOOR CLEARANCE

Dimensions in parentheses are in centimeters unless otherwise noted.
Actual product dimensions may vary due to manufacturing tolerances.

MONOGRAM

WALL INSTALLATION

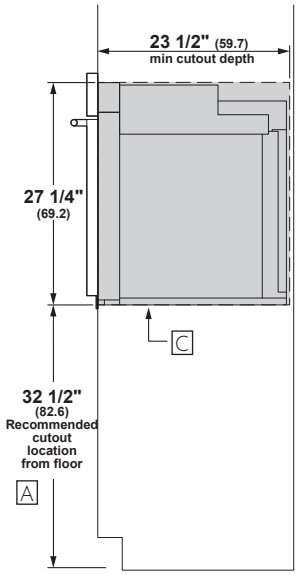

STANDARD INSTALLATION

Allow 1/8" (0.3 cm) clearances from side edges of oven door.

UNDERCOUNTER INSTALLATION

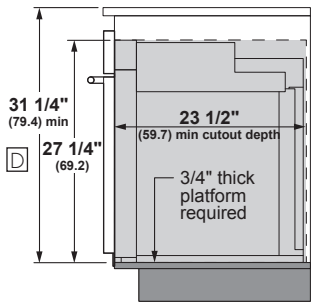

STANDARD INSTALLATION

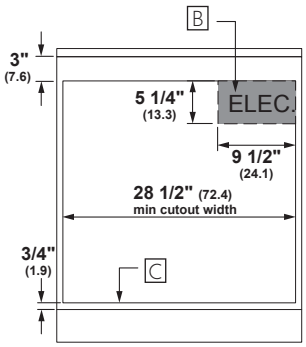

STANDARD INSTALLATION FRONT VIEW

HELPFUL TIPS

A Based on a user height of 5' 6" to 5' 10"

B Junction box location (may also be located in adjacent cabinet)

C Platform must be able to support 220 lbs (99 kg)

D Minimum 31 1/4" from the top surface of the countertop to the top surface of the wall oven support platform when installed beneath a certified cooktop

For more details, refer to the installation instructions for this product on Monogram.com.
Dimensions in parentheses are in centimeters unless otherwise noted.

MONOGRAM

INSTALLATION WITH ADVANTIUM AND WARMING DRAWER

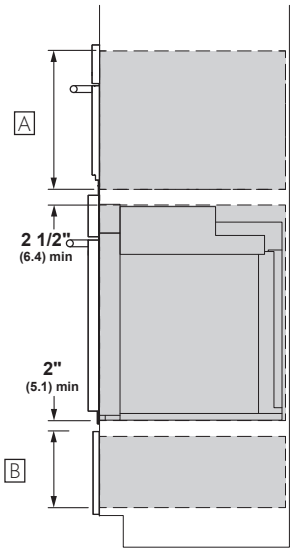

STANDARD INSTALLATION
SIDE VIEW

SIDE-BY-SIDE INSTALLATION

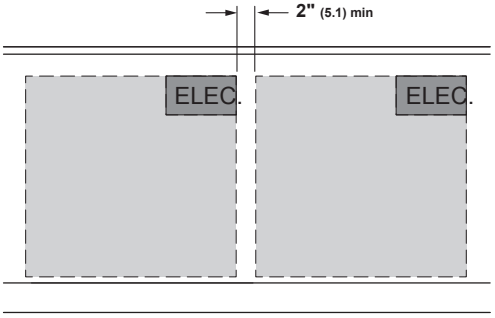

SIDE-BY-SIDE INSTALLATION
FRONT VIEW OF CUTOUTS

UNDER COOKTOP INSTALLATION

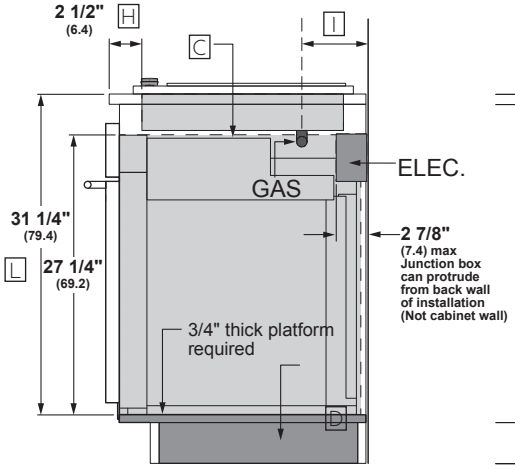

STANDARD INSTALLATION
SIDE VIEW

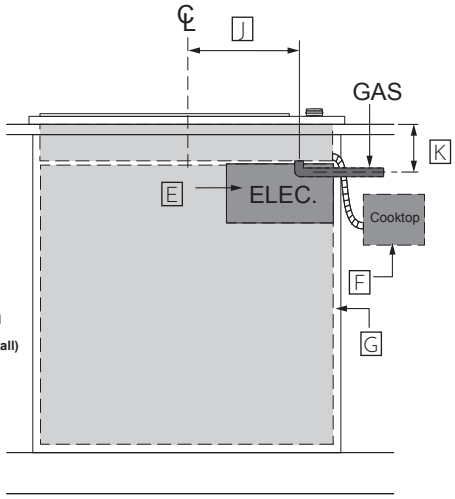

FRONT VIEW

HELPFUL TIPS

A Dimensions per Advantium or Microwave Oven requirements

B Dimension per Warming Drawer requirements

C Note: This oven is only approved to be installed under specific models as labeled on this unit

D Support platform made of 3/4" (1.9 cm) wood is required. Must be capable of supporting 220 lbs (99 kg). Support Platform base to be same height as toe kick

E Junction box location for wall oven. (May also be located in adjacent cabinet)

F Gas regulator and electric connections for cooktops must be located in an adjacent accessible location to the right

G Top and/or side fillers may be necessary if unit is positioned between existing cabinets. Be sure they are attached securely, since they will anchor the oven in the cabinet

H For flush oven installations, the cooktop cutout must be set back 2 1/2" (6.4 cm) plus the cleat setback

I Dimension varies based on model. Example:
ZGU36 5 1/2" (14.0 cm) (from wall)
ZGU30 4 5/16" (11.0 cm) (from wall)

J Dimension varies based on model. Example:
ZGU36 0" (centerline)
ZGU30 12 1/16" (30.6 cm) (centerline)

K Dimension varies based on model. ZGU36: 5 1/2" (13.9 cm) requires use of a 90° 1/2" FPT x 1/2" FL brass street elbow ZGU30: 5" (12.7 cm)

L From the top surface of the countertop to the top surface of the wall oven support platform

For more details, refer to the installation instructions for this product on Monogram.com.
Dimensions in parentheses are in centimeters unless otherwise noted.