ASSEMBLY INSTRUCTION FOR ACME FURNITURE

MODEL#LV03745

Thank you for purchasing the quality product. Be sure to check all packing material carefully for small parts which may have come loose inside the carton during shipment. Seperate, identify and count all parts and metal hardware. Compare with all parts list to be sure all parts are present. If any part(s) are missing or damaged, please contact your local fumiture dealer. For efficient and speedy service, please indicate the model number and code letter of part(s) needed.

*****Do not fully tighten screws until fully assembled*****

	COMPONENT PARTS	
DESCRIPTION	**PART NAME**	**QTY(PCS)**
①	**TOP** 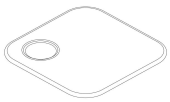	**1**
②	**BASE**	**4**

HARDWARE REQUIRED

A		LONG SCREW	M8*265	**8**	**PCS**
B	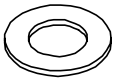	FLAT WASHER	Φ20*10*2	**8**	**PCS**
C		BOLT	M8	**8**	**PCS**
D		DOWEL	Φ8*30	**4**	**PCS**
E		ALLEN KEY		**1**	**PCS**
F		HOLE COVER	Φ25*3	**4**	**PCS**

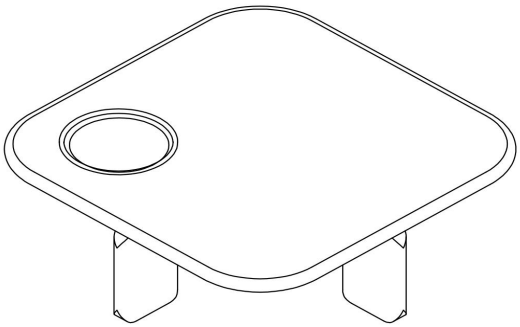

Attention

*****Some number parts listed on the instruction sheet may not be in parts bag as they may already be assembled.**
Carefully check parts and packing materials prior to ordering replacements.

How to assemble:
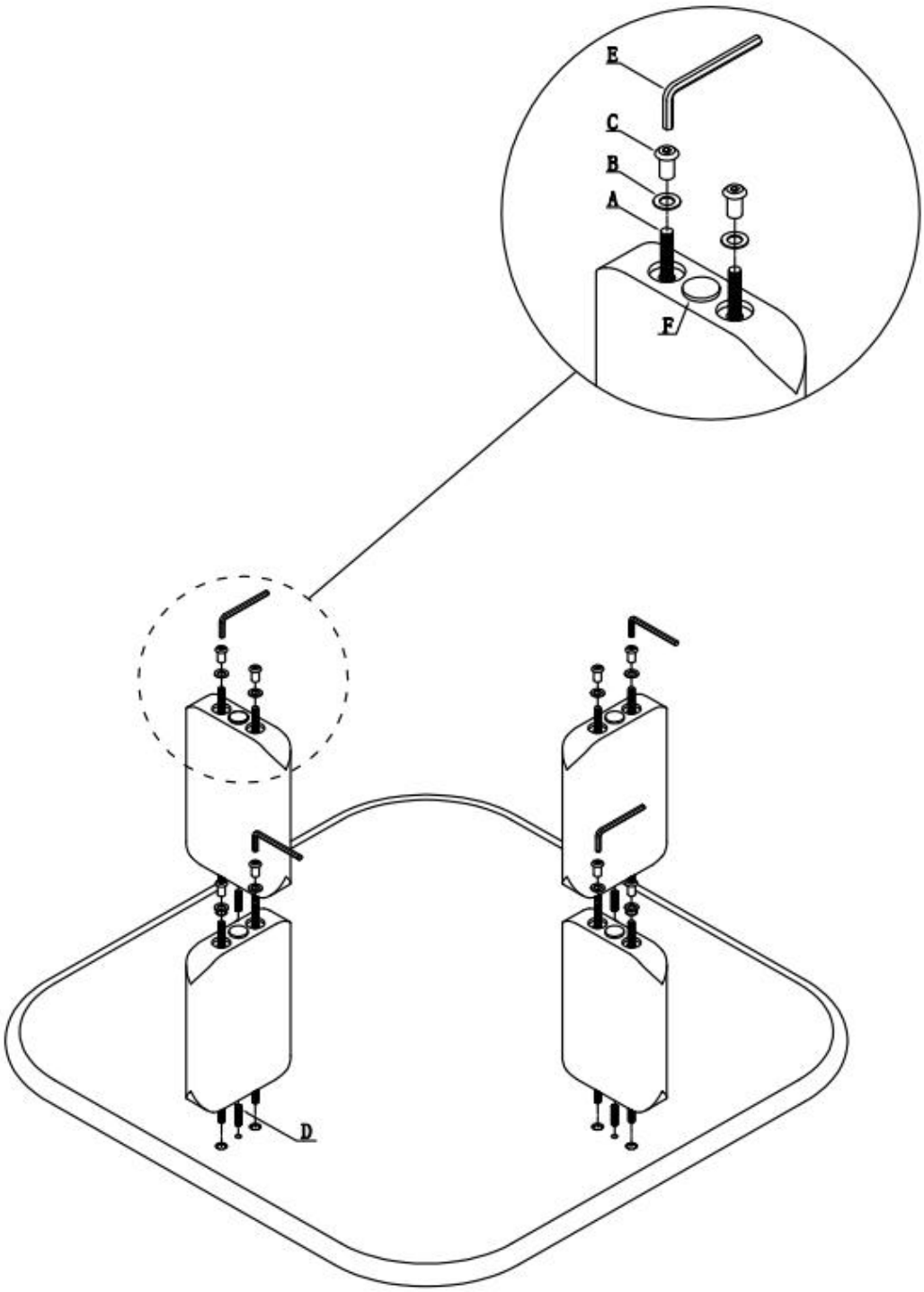
STEP1