Model Number: PRH18-148

Special Notes: LED lights. WBAR warming light bar is available on selected models.

WIDTH:	48"
DEPTH:	24"
HEIGHT:	18"
CFM:	300
SONES:	5.4
AMPS:	2.5
# LIGHTS:	3

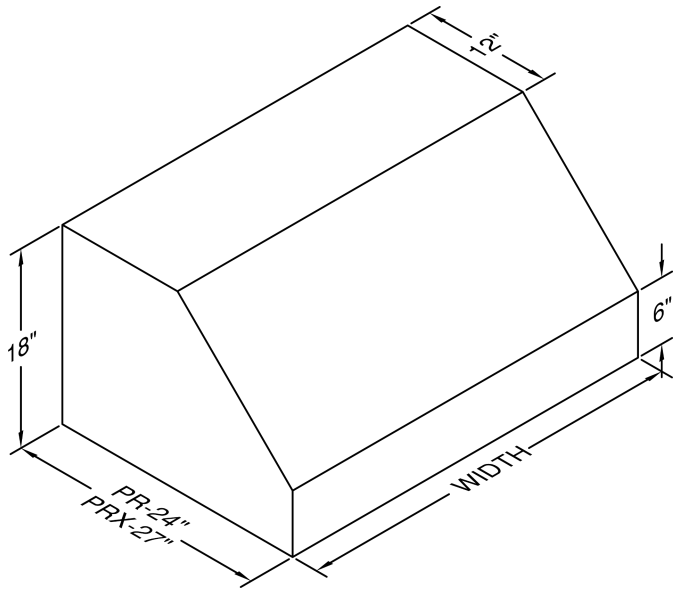

CONNECTION DIAGRAM

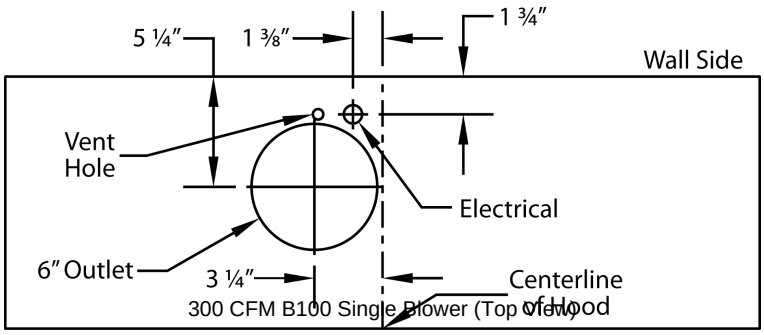

300 CFM B100 Single Blower (Top View)

REC. MOUNTING HEIGHT*

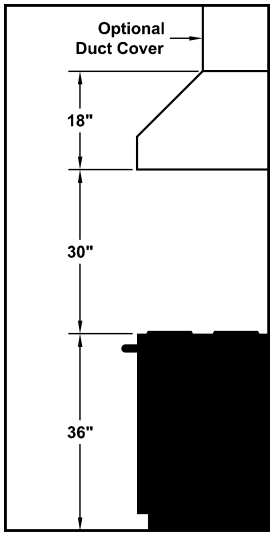

* Exceeding recommended mounting height may compromise performance.

ELECTRICAL/MECHANICAL SPECIFICATIONS FOR BLOWER UNIT

MODEL	VOLTS	AMPS+	HZ	RPM	CFM SP@0.0"	EQUIV CFM$	CFM SP@0.1"	CFM SP@0.2"	CFM SP@0.3"	MIN. ROUND DUCT SIZE	SONES#
B100 Single	115	2.5	60	1550	300	450	273	245	225	6" (28 sq. in.)	5.4

+ Add 2.5 amps for each warming light. This model is equipped with LED lighting: (2 lights: 30" - 41", 3 lights: 42" - 53", 4 lights: 54" - 66").

$ Because the Magic Lung blower uses centrifugal filtration rather than conventional baffle or mesh filters, the Magic Lung blower can handle cooking equipment with higher cubic feet per minute (CFM) requirements and can deliver equivalent CFM much more efficiently than other filtration systems. When comparing the Magic Lung with other blower units made by other manufacturers, use the "Equivalent CFM".

Ratings in accordance with the Standard Test Code by the Energy Systems Laboratory of the Texas Engineering Experiment Station.