INSTALLATION INSTRUCTIONS
CARE AND MAINTENANCE

American Standard

MURRO WALL HUNG BASIN
Models 0954, 0955, 0958

FOR CONCEALED ARM SUPPORT, REFER TO CARRIER MANUFACTURER'S INSTRUCTIONS

Thank you for selecting American Standard - the benchmark of fine quality for over 100 years. To ensure this product is installed properly, please read these instructions carefully before you begin. (Certain installations may require professional help.) Also be sure your installation conforms to local codes.

CAUTION: PRODUCT IS FRAGILE. TO AVOID BREAKAGE AND POSSIBLE INJURY HANDLE WITH CARE!
NOTE: *Pictures may not exactly define contour of china and components.*

OBSERVE LOCAL PLUMBING AND BUILDING CODES

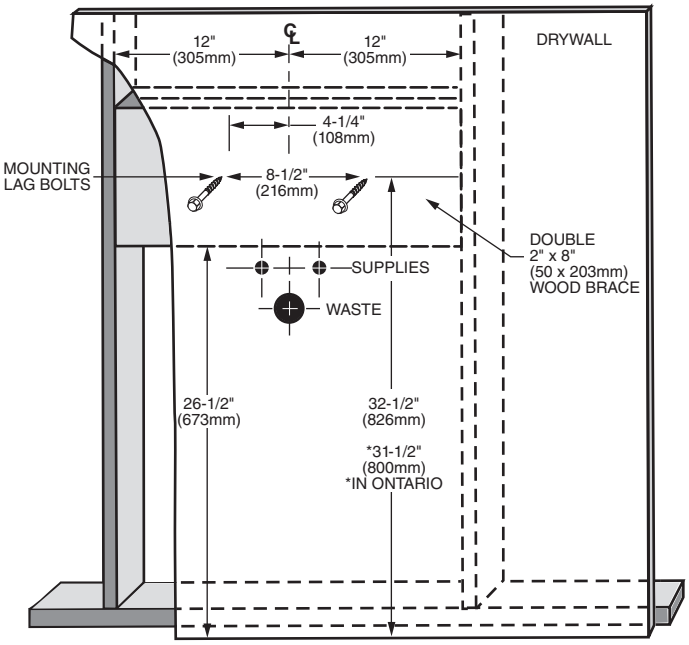

FIGURE 1

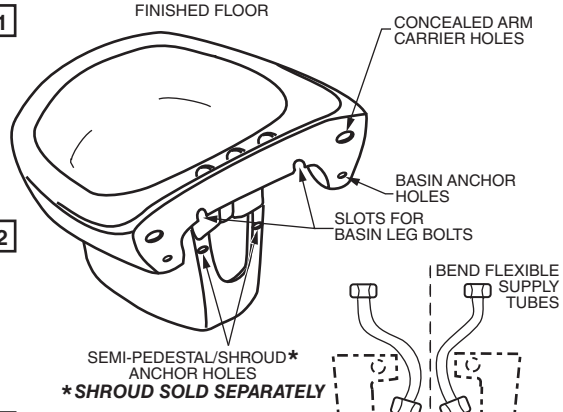

FIGURE 2

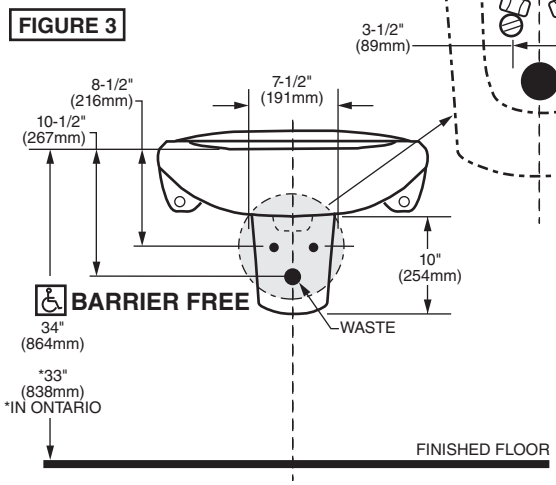

FIGURE 3

Top of front rim must be mounted at less than 864mm (34") from the finished floor to meet ADA and ANSI A117.1 requirements. In Ontario, the code requires a height of 838mm (33"). **Check local codes.**

Suggested Tools and Supplies:

Adjustable Wrench	Rule	Pliers
3/4" Socket Wrench	Drill	Basin Faucet
No. 3 Philips Screwdriver	Drill bits: 1/8" (3 mm) dia. 3/8" (10 mm) dia.	Drain Assembly
Hot/Cold Screwdriver Stop		Carpenter Level

Provide Rough-In:	Install waste pipe. Space supplies (hot/cold screwdriver stops) 1-5/8" (41mm) to either side of center. Firmly attach two 2" x 8" (50 x 203 mm) wood braces to wall studs. Bottom of brace should be 26-1/2" (673 mm) up for floor and extend a minimum of 12" (305 mm) to either side of waste. Complete drywall installation (see Figure 1).
Install Mounting Bolts:	Mark locations of 4" (102 mm) mounting lag bolts 4-1/4" (108 mm) to either side of center. Pre-drill mounting holes then fasten lag bolts and washers supplied. Allow each bolt head to protrude 1-1/4" (32 mm) from finished wall.
Level Basin and Mark Screw Locations:	Mount basin on protruding lag bolts and level. Mark basin anchor holes. If semi-pedestal/shroud is desired (ordered separately), position it under lips at bottom of basin and mark anchor holes. Set fixtures aside. Pre-drill anchor holes in wall where marked, drilling semi-pedestal/shroud holes at a 45˚ angle toward center.
Install Fittings:	Install faucet and waste assembly according to manufacturer's instructions before installing basin.
Mount Basin:	Remount basin on lag bolts and secure with 2" (51mm) wood screws and washers provided. Firm up lag bolts but do not over-tighten.
Connect Supplies:	Connect hot/cold supplies and drain pipe. Bend flexible supplies to clear opening in semi-pedestal/shroud. Turn on water. Check for leaks.
Mount Pedestal:	Reposition semi-pedestal/shroud. Secure to wall using 2" (51 mm) screws and washers provided.

S A V E F O R F U T U R E U S E

CUSTOMER SERVICE INFORMATION

In the United States:
American Standard Brands
P.O. Box 6820
Piscataway, New Jersey 08855
Attn: Director of Customer Care

For residents of the United States, warranty information may also be obtained by calling the following toll free number: (800) 442-1902

www.americanstandard.com

In Canada:
AS Canada ULC
5900 Avebury Rd.
Mississauga, Ontario
Canada L5R 3M3
Toll Free: (800) 387-0369

www.americanstandard.ca

In Mexico:
American Standard B&K Mexico
S. de R.L. de C.V.
Via Morelos #330
Col. Santa Clara
Ecatepec 55540 Edo. Mexico
Toll Free: 01-800-839-1200

www.americanstandard.com/mx

Product names listed herein are trademarks of AS America, Inc.
© AS America, Inc. 2013