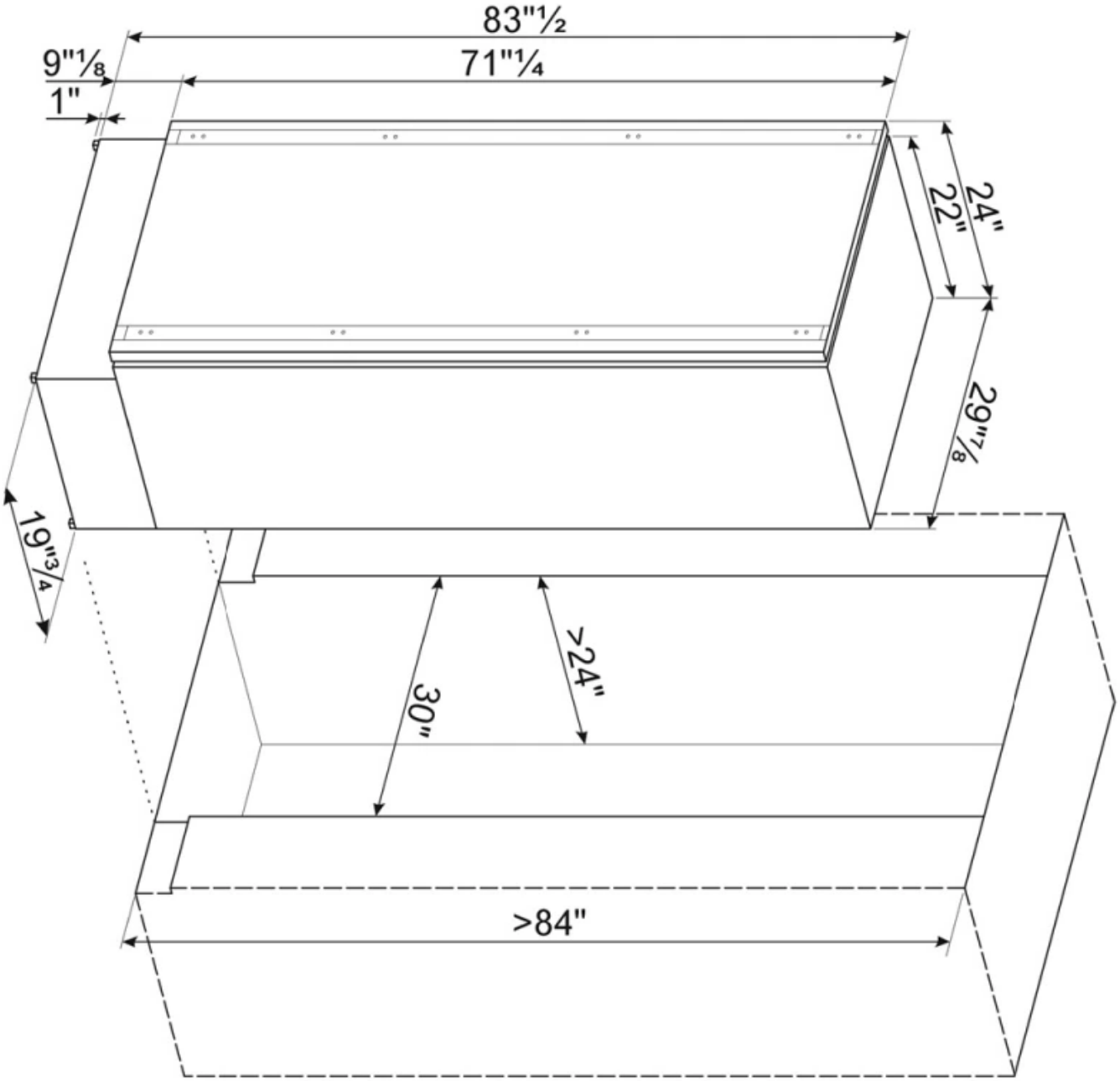
83"½
9"⅛
71"¼
1"
24"
22"
29"⅞
19"¾
30"
>24"
>84"

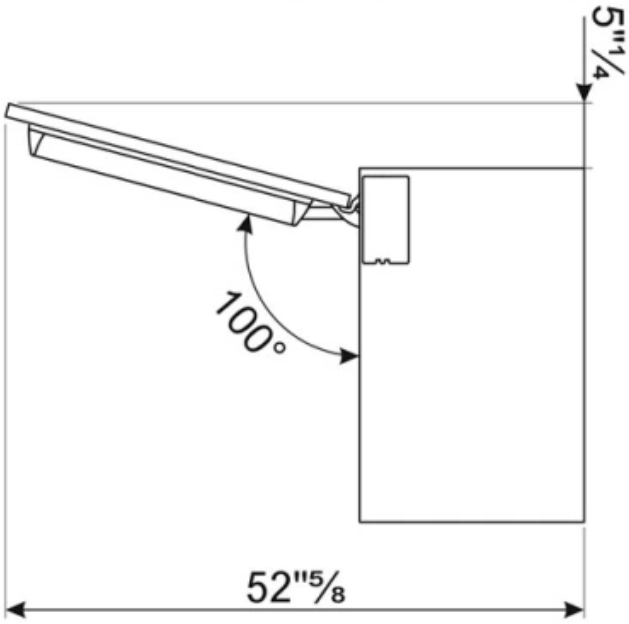
5"¼
100°
52"⅝

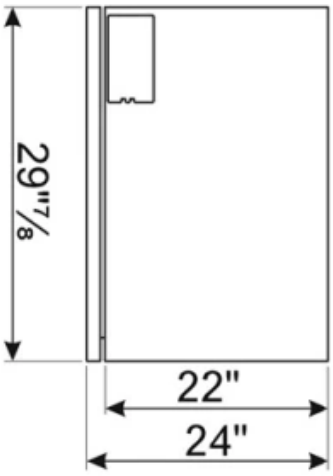
29"⅞
22"
24"