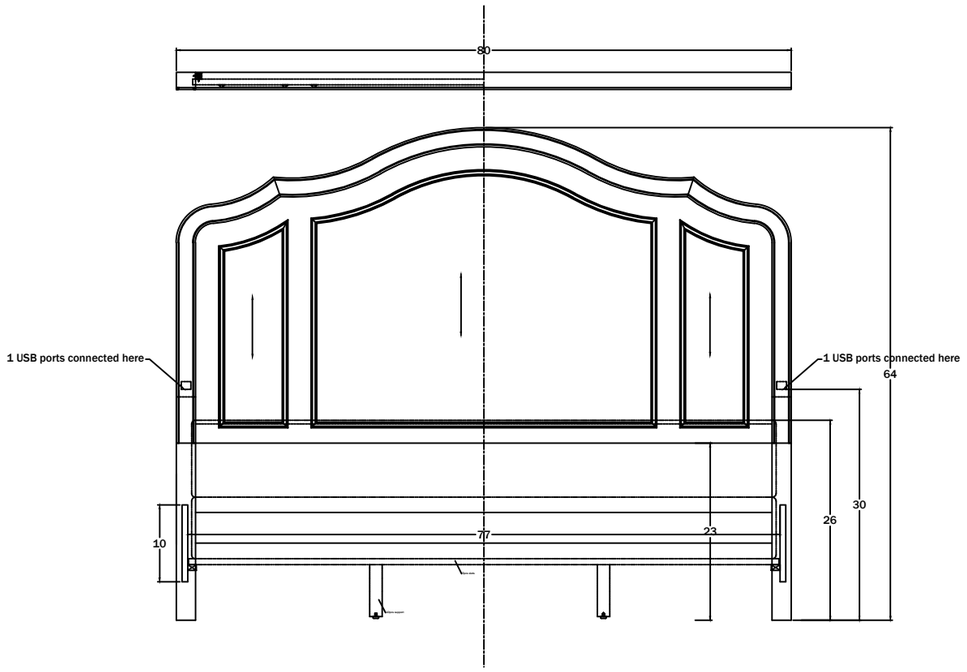
80
1 USB ports connected here
1 USB ports connected here
64
30
26
23
77
10

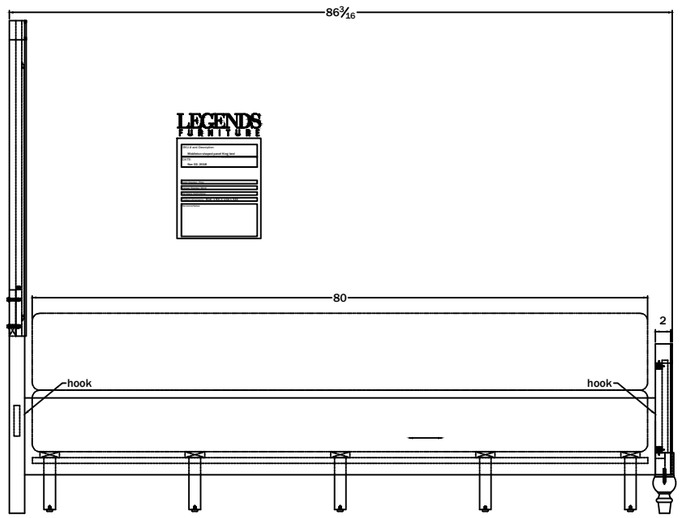
86 3/16
LEGENDS
FURNITURE
80
2
hook
hook

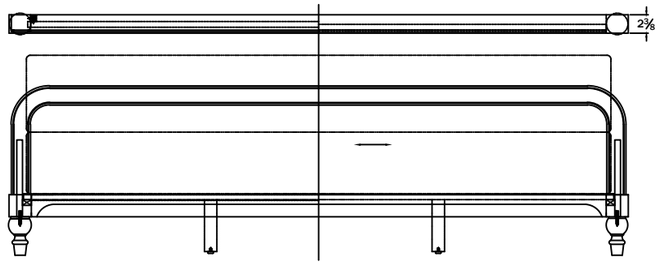
2 3/8

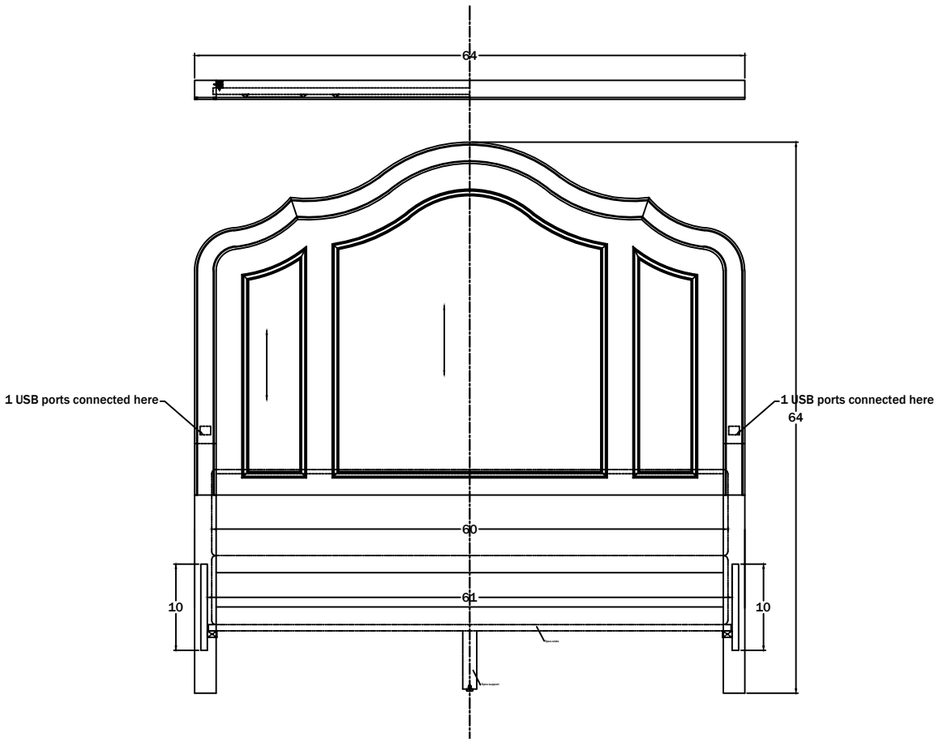
64
1 USB ports connected here
1 USB ports connected here
64
60
61
10
10

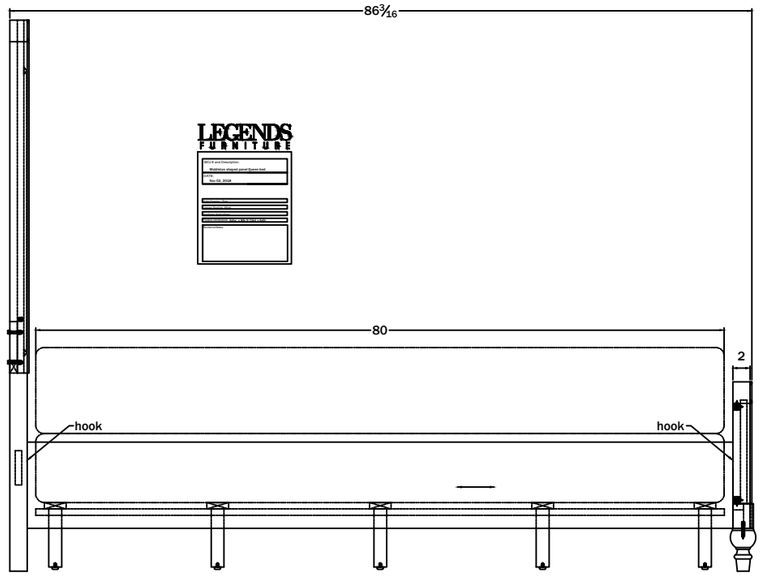
86 3/16
LEGENDS
FURNITURE
80
2
hook
hook

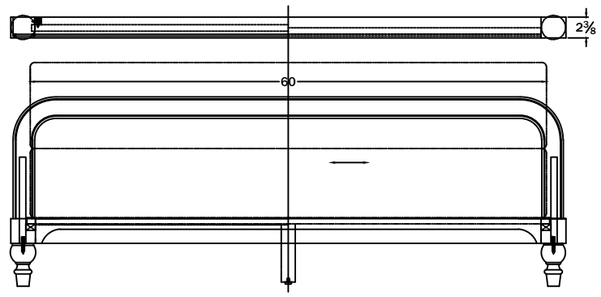
2 3/8
60

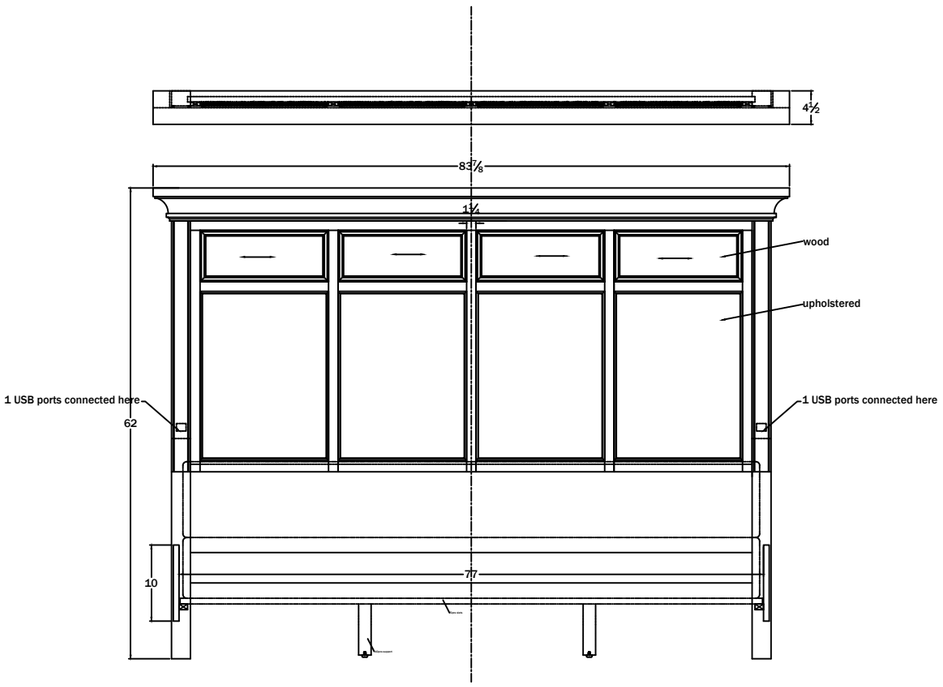
4½
83⅞
1¼
wood
upholstered
1 USB ports connected here
1 USB ports connected here
62
10
77

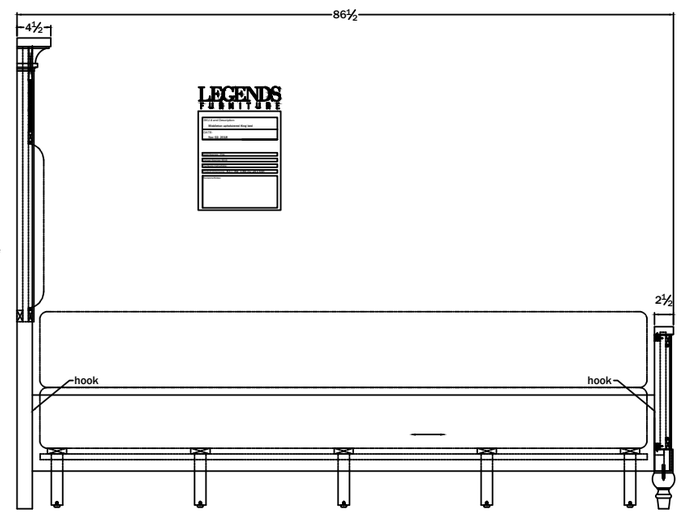
86½
4½
LEGENDS
FURNITURE
2½
hook
hook

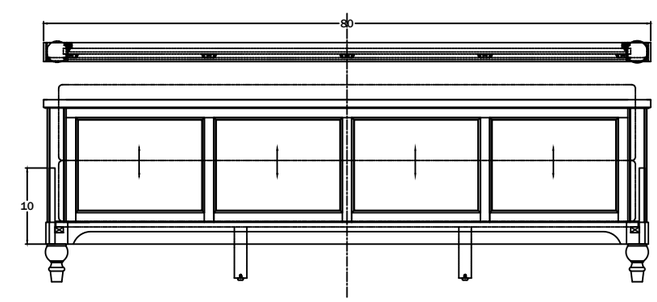
80
10

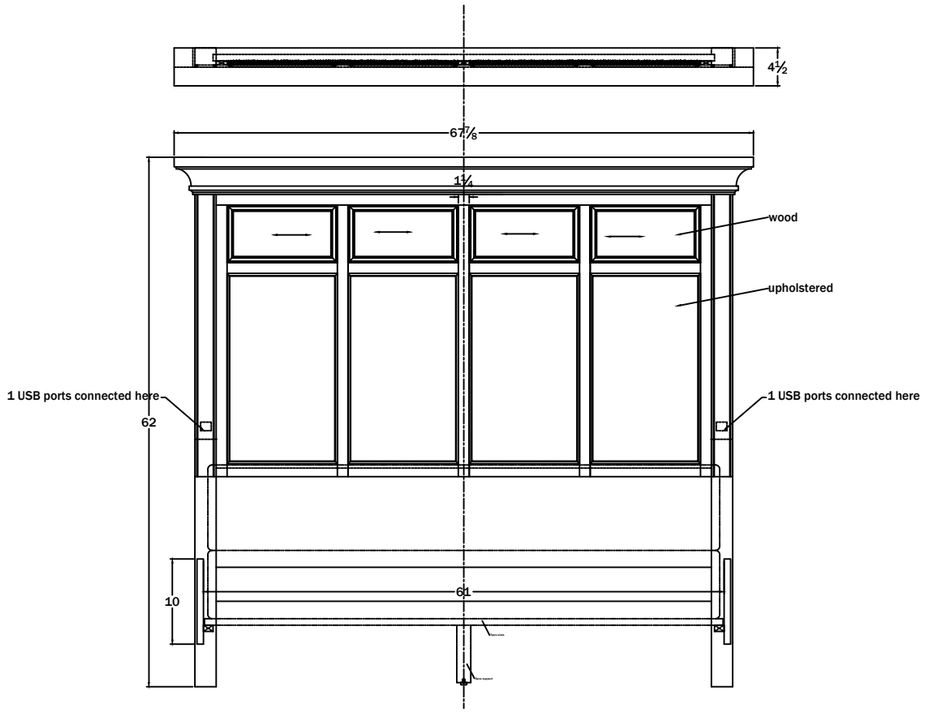
4½
67⅞
1¼
wood
upholstered
1 USB ports connected here
1 USB ports connected here
62
10
61

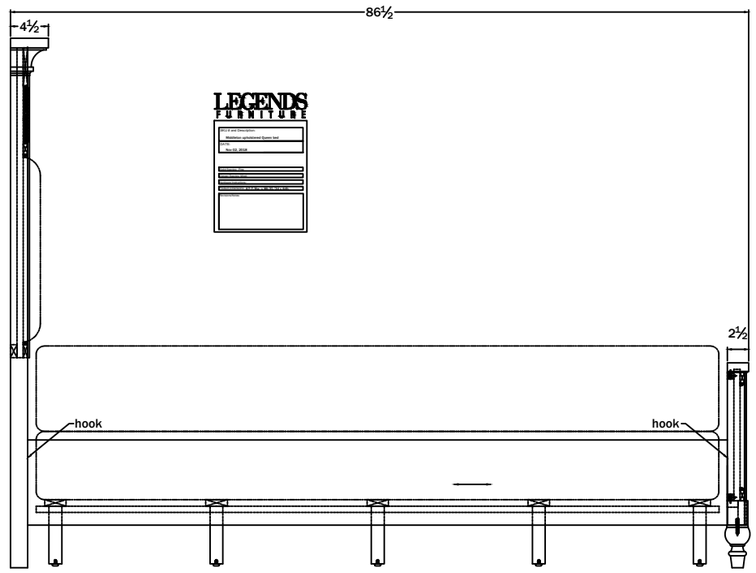
86½
4½
LEGENDS
FURNITURE
2½
hook
hook

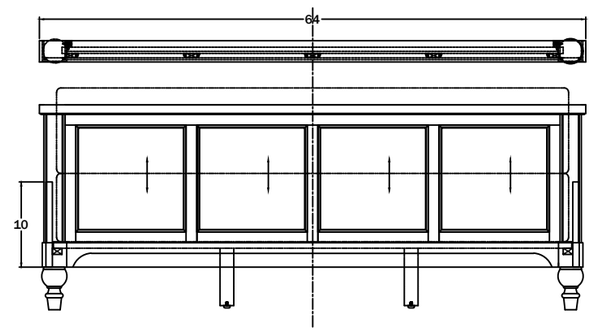
64
10