DETAILED DIMENSIONS

8608-**NS** Alto **N**ight **S**tand (Two **D**rawers)

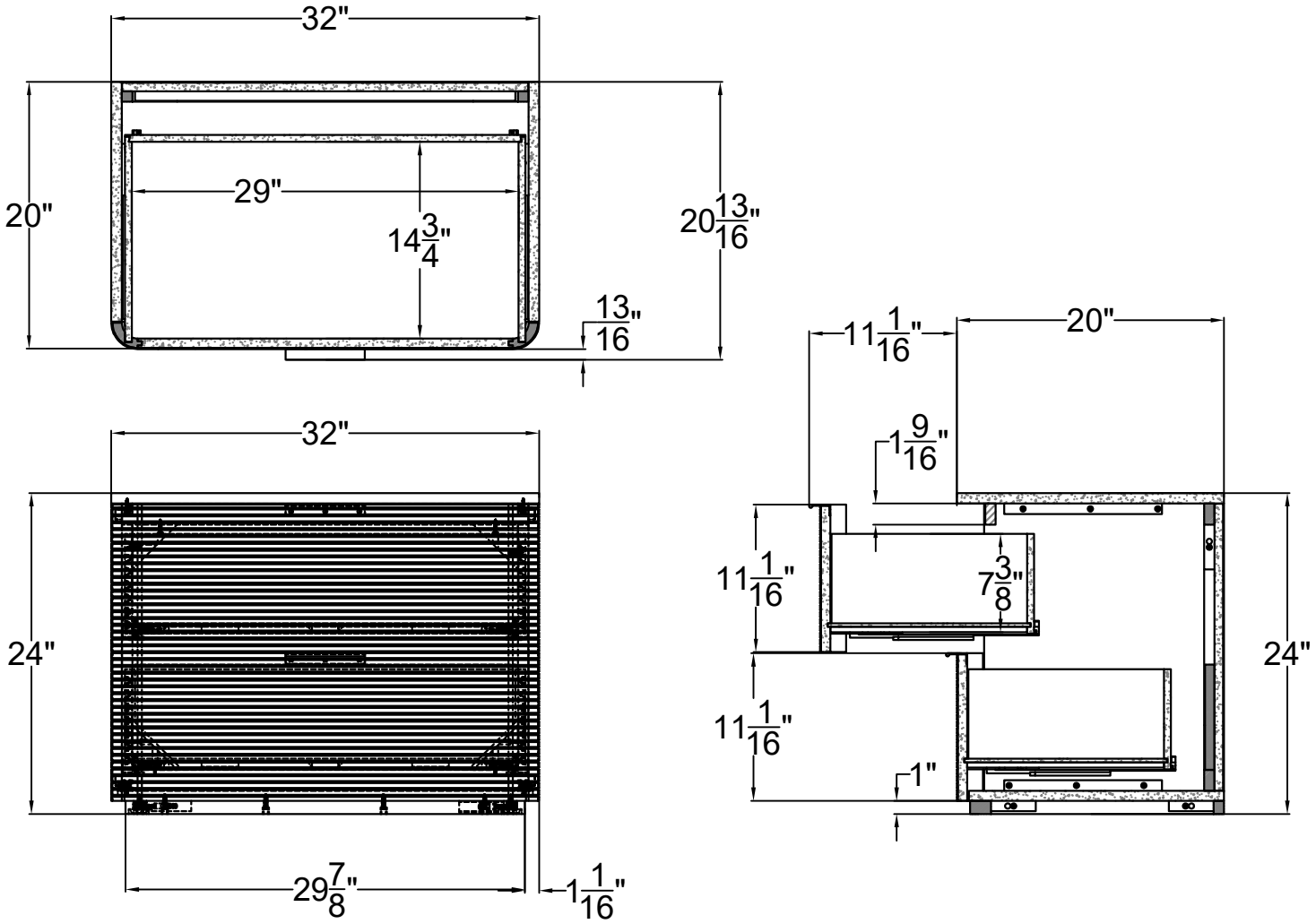

Due to the handcraed nature of our product, variations to plus or minus 1" of our listed measurements could occur. Specifications are subject to change without notice.