C.R. PLASTIC PRODUCTS

we create sustainable outdoor living

T203

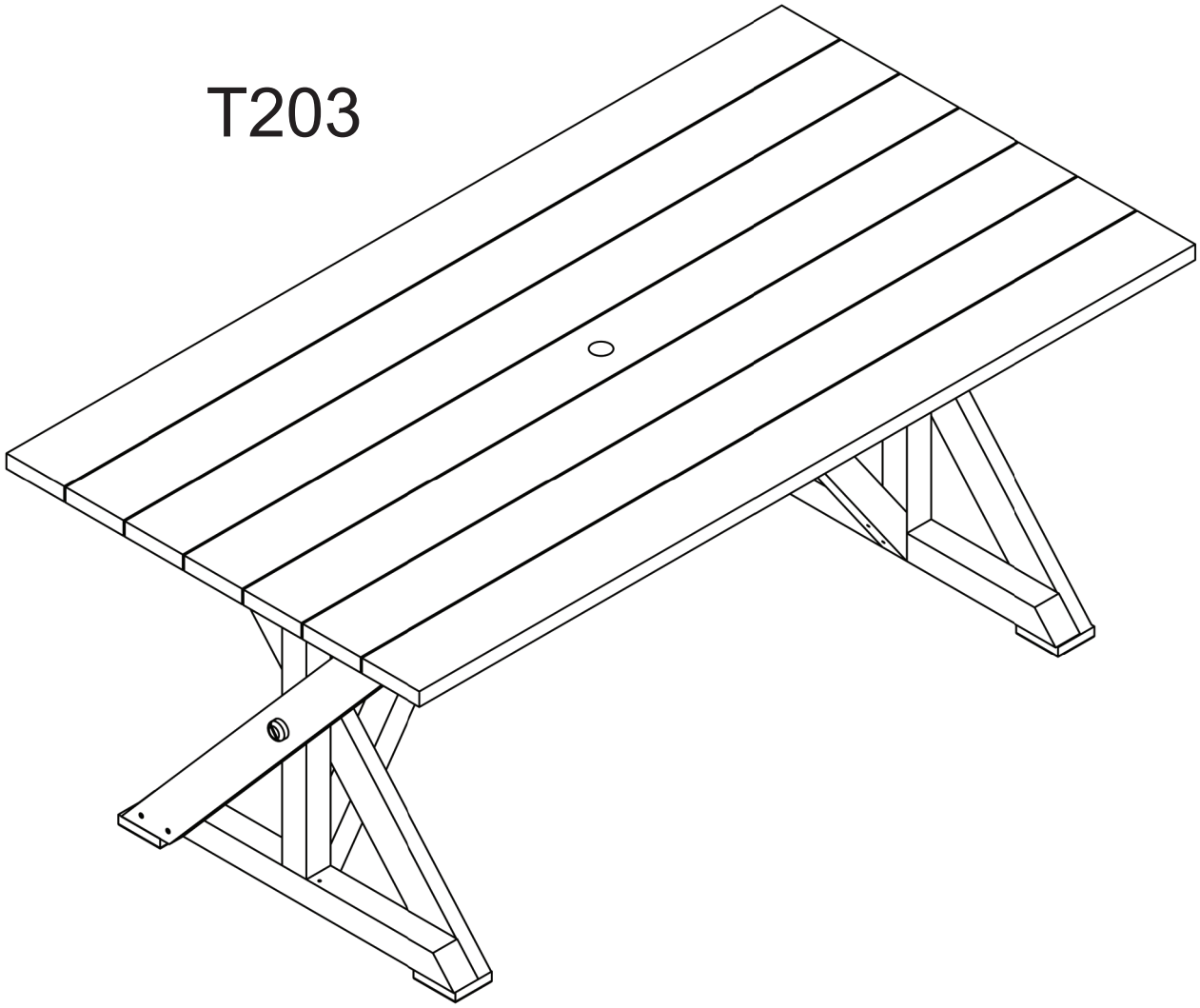

C.R. PLASTIC PRODUCTS

T203

we create sustainable outdoor living

Ⓐx1

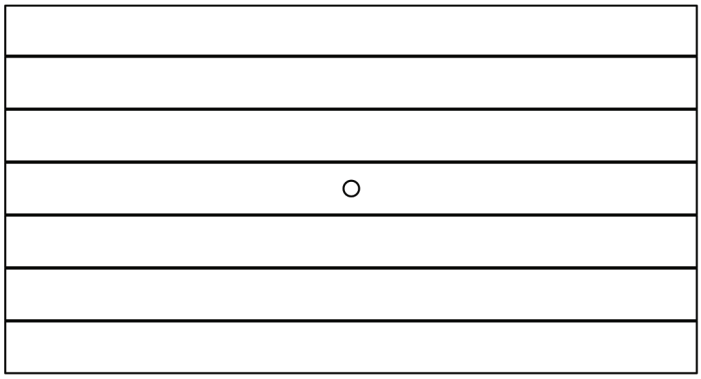

Ⓑx2

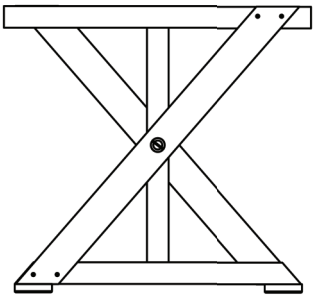

Ⓒx2

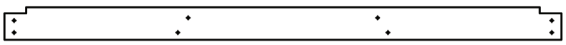

Ⓓx2

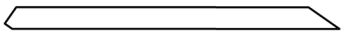

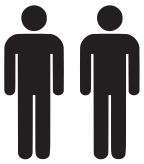

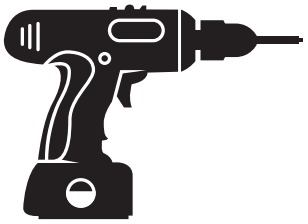

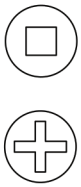

#2

1 1/2" / 38 mm Ⓔx6

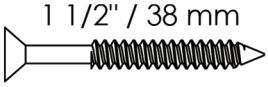

3" / 76 mm Ⓕx26

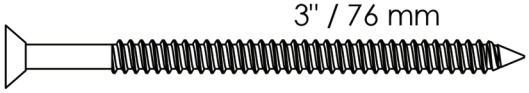

2 1/2"" / 63 mm Ⓖx16

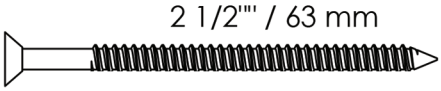

1-866-439-9521

wecare@crplastics.com

www.crpproducts.com

T203

1

Ⓐ x1
Ⓑ x2
Ⓕ x24

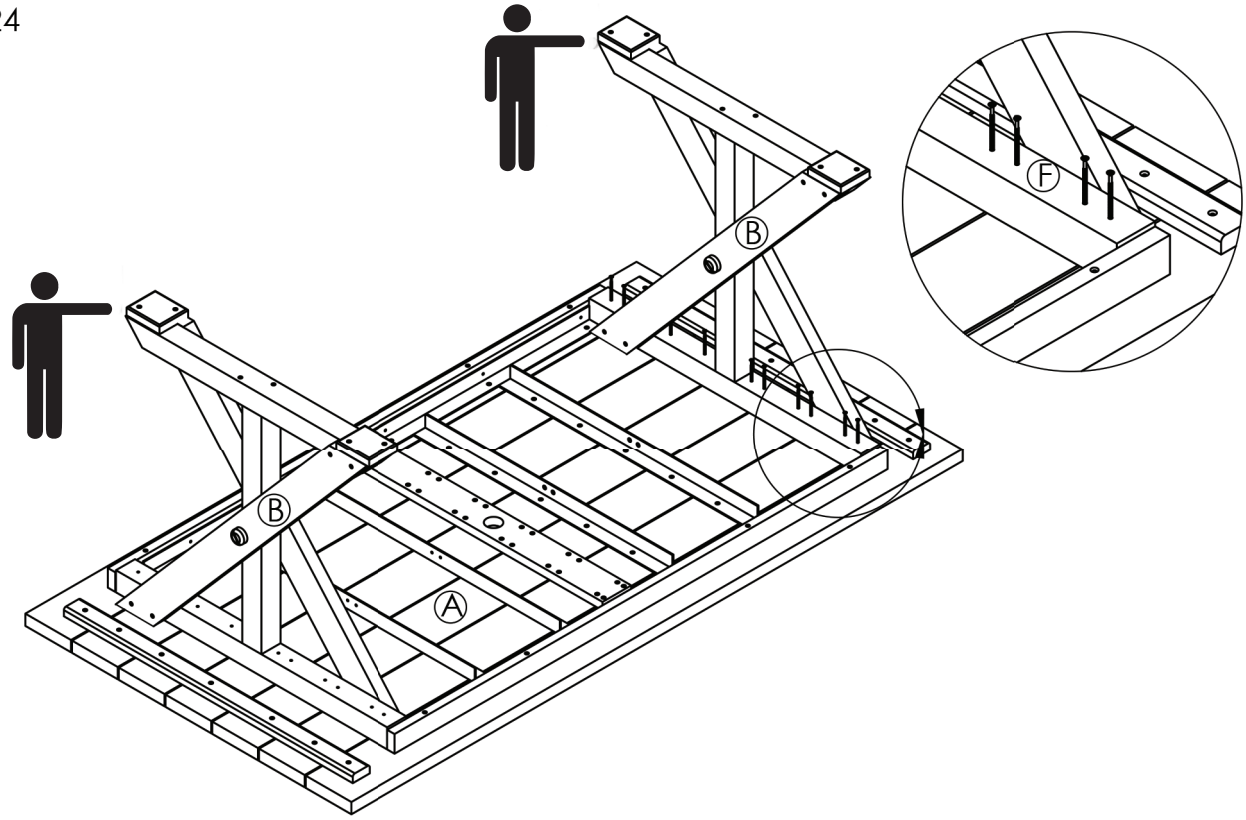

2

Ⓓ x2
Ⓔ x6
Ⓕ x2

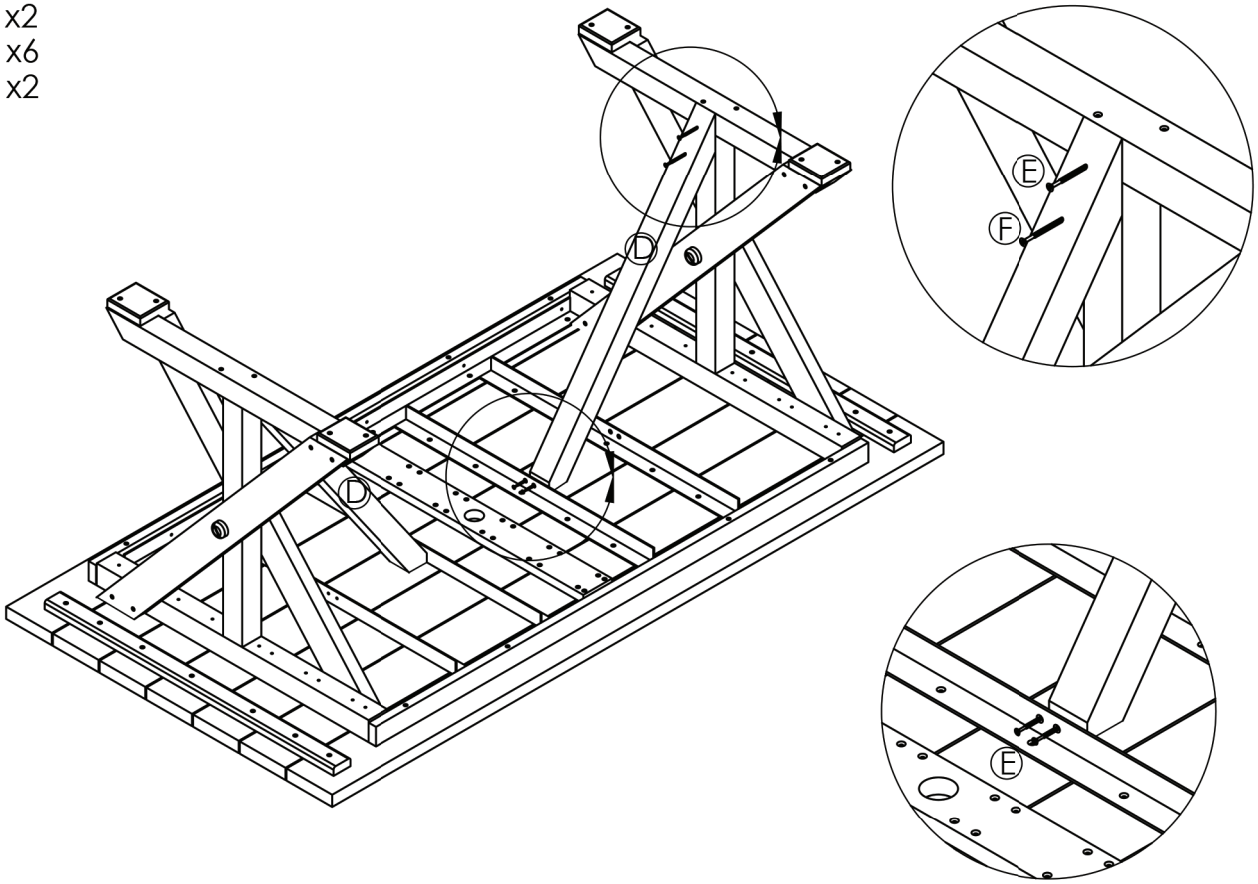

T203
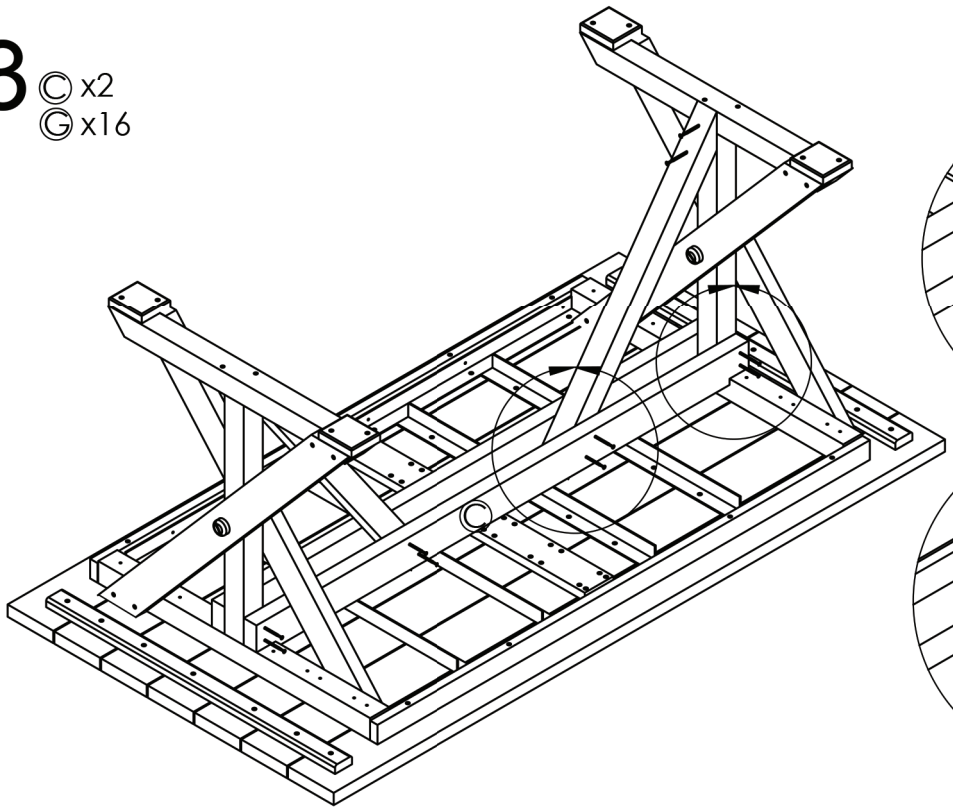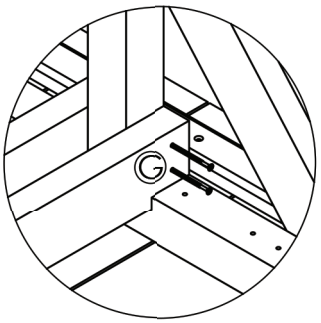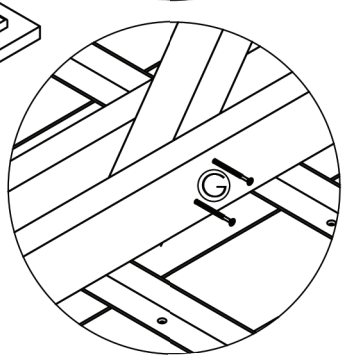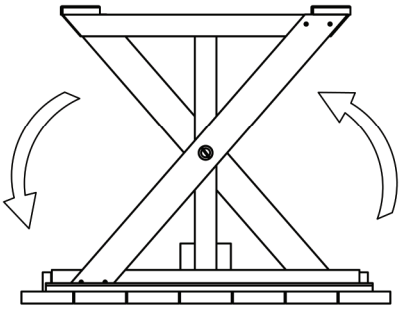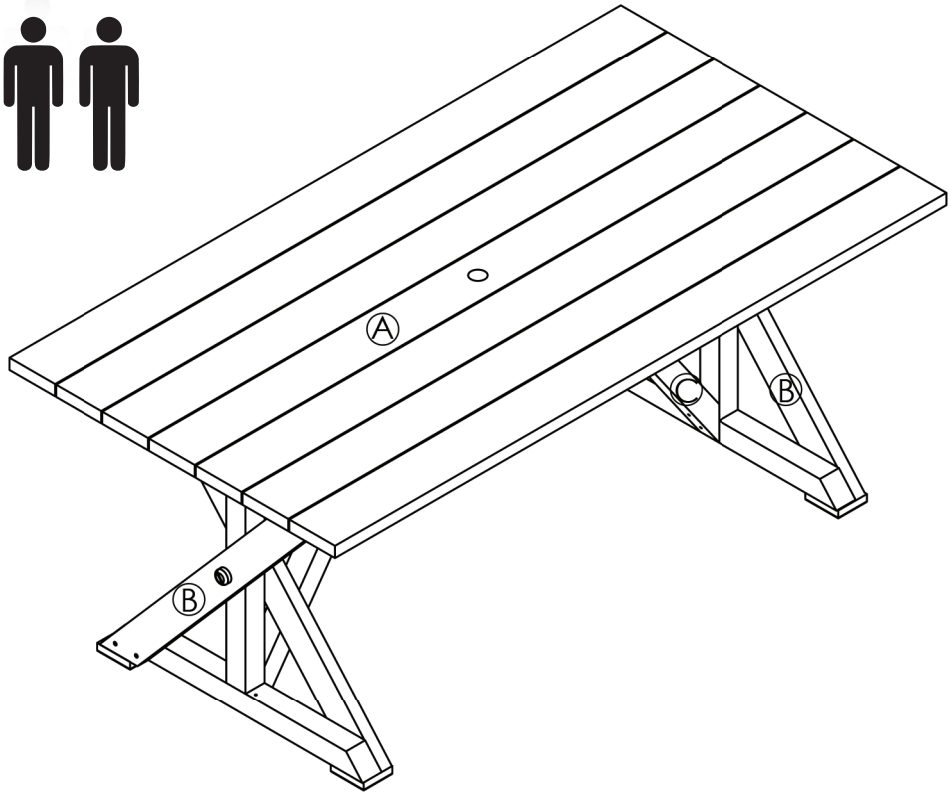
3 Ⓒ x2
Ⓖ x16