DETAILED DIMENSIONS

8610-SN Stewart Petite One Drawer Night Stand

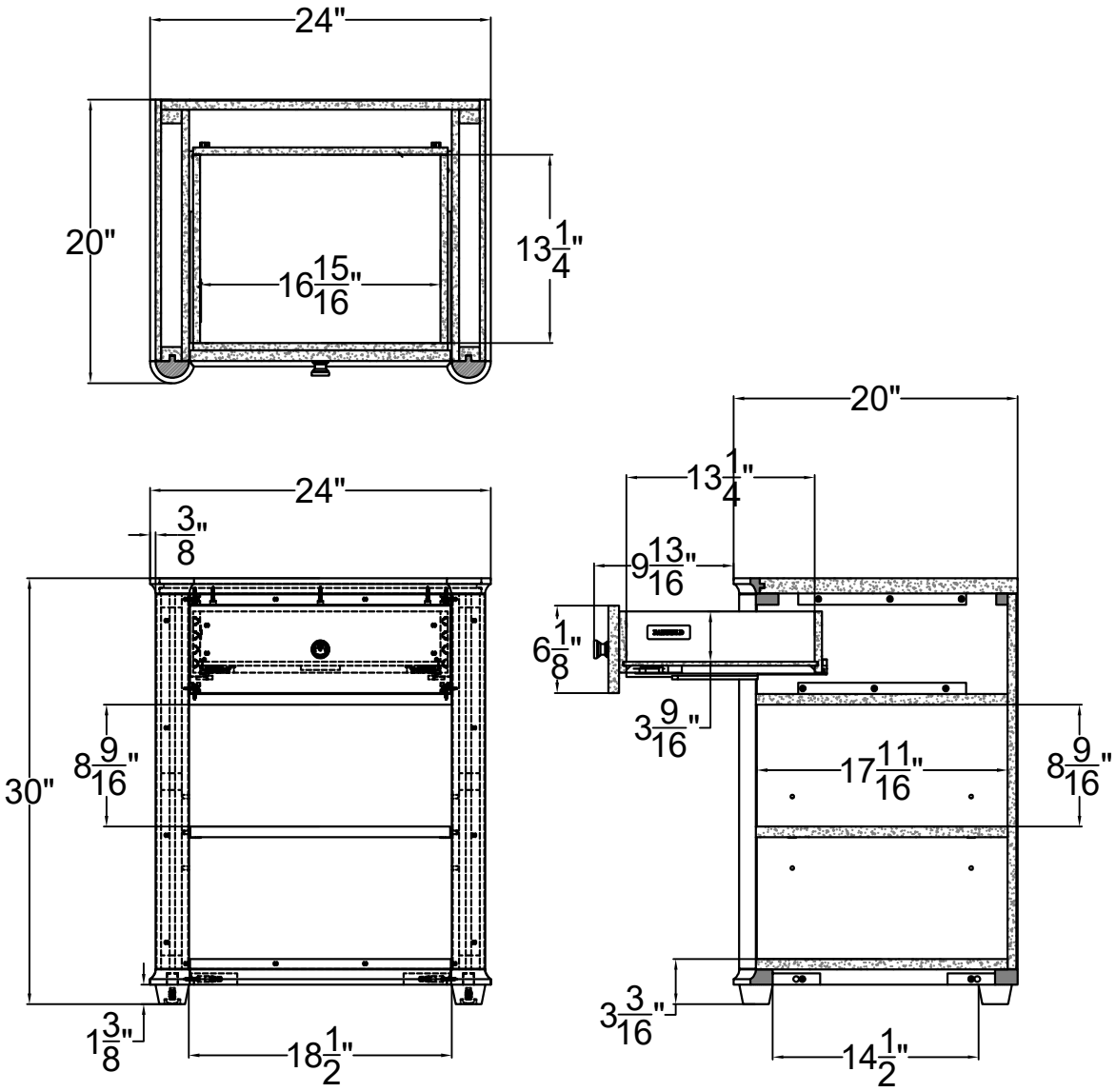

Due to the handcraed nature of our product, variations to plus or minus 1" of our listed measurements could occur. Specifications are subject to change without notice.