

OWNERS MANUAL

Klipsch®

PROFESSIONAL SERIES

THX

PLACEMENT

POSITIONNEMENT UBICACIÓN PLATZIERUNG POSIÇÃO COLLOCAZIONE 布置

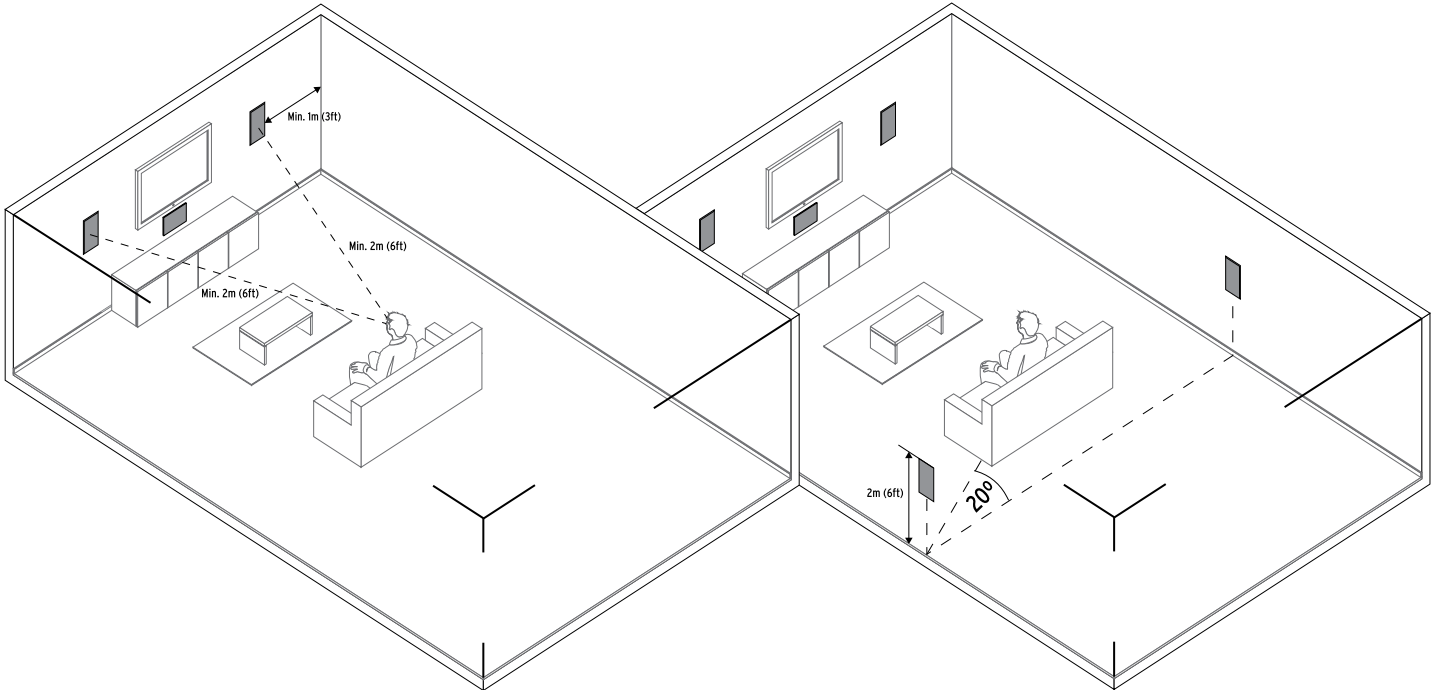

PLACEMENT

POSITIONNEMENT UBICACIÓN PLATZIERUNG POSIÇÃO COLLOCAZIONE 布置

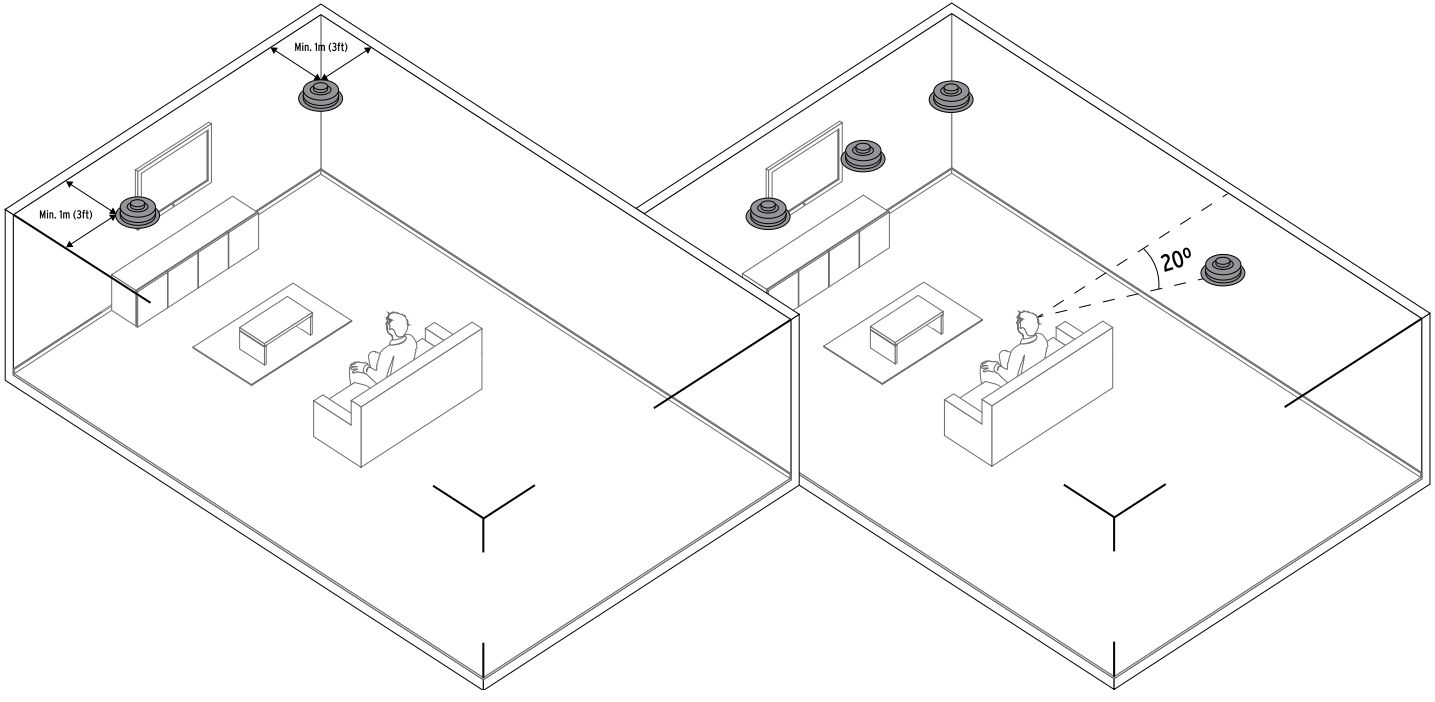

CUT OUT

DÉCOUPER SEPARAR AUSGESCHNITTEN RECORTAR RITAGLIARE 剪下

1

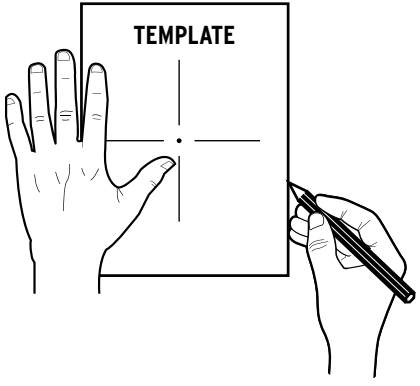

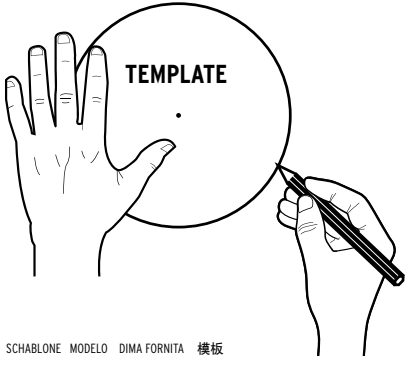

TEMPLATE
GABARIT PLANTILLA SCHABLONE MODELO DIMA FORNITA **模板**

2

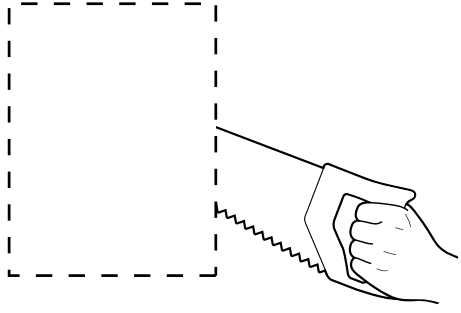

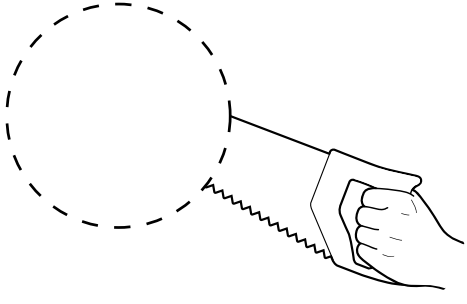

CONNECTIONS

BRANCHEMENTS CONEXIONES ANSCHLÜSSE CONNESSIONI CONEXÕES 连接

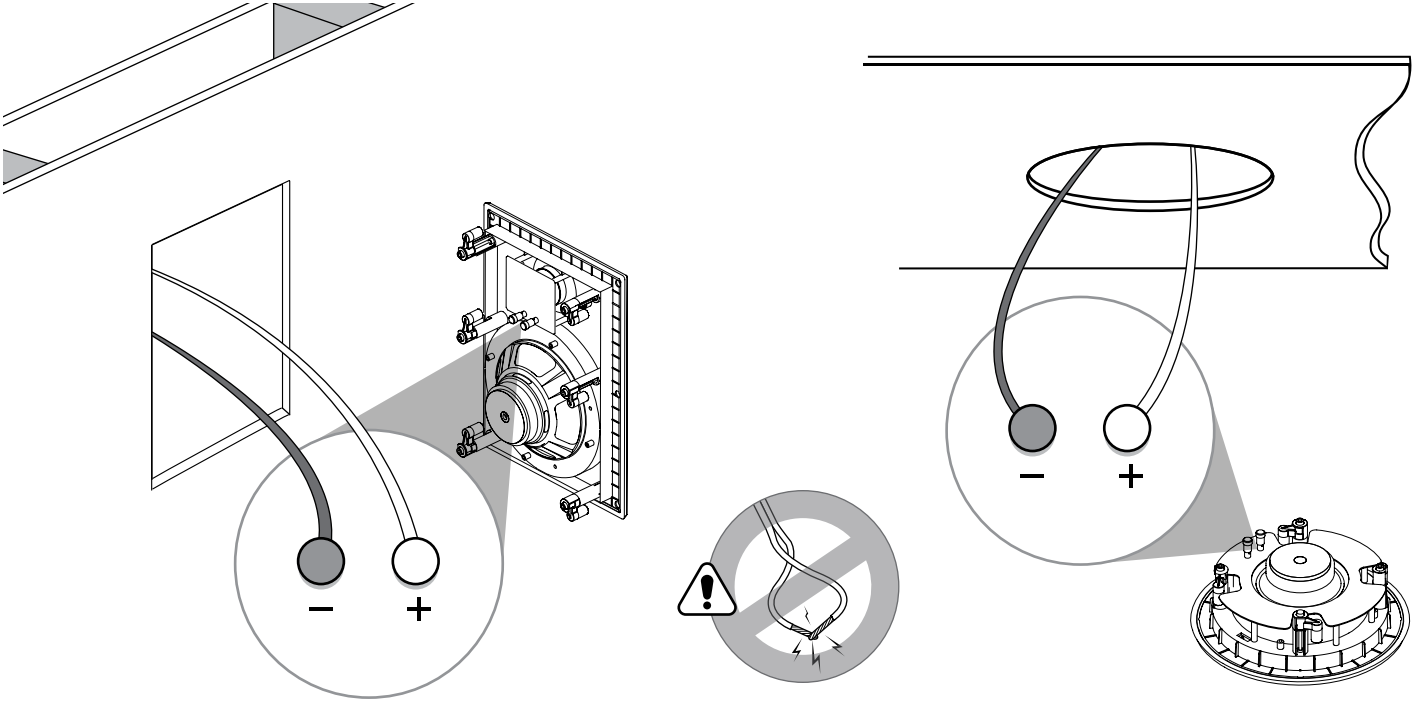

INSTALLATION

INSTALLATION CONFIGURACIÓN INSTALLATION APPRONTAMENTO INSTALAÇÃO 设置

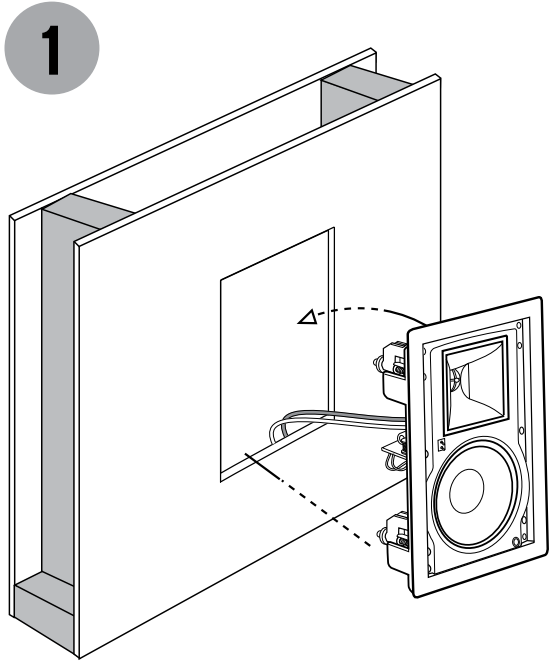

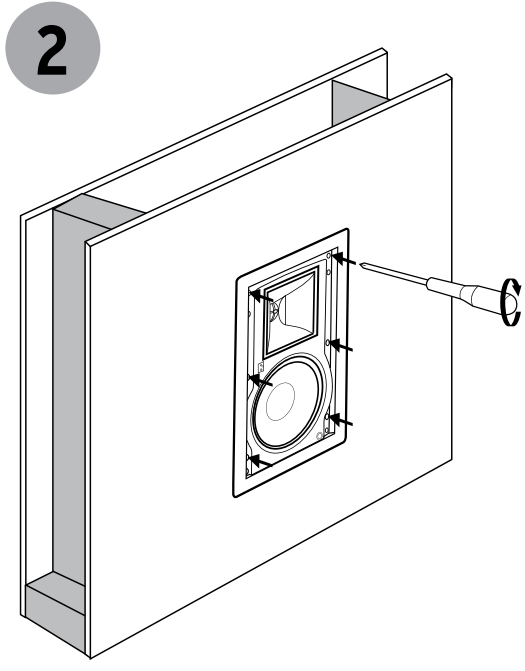

INSTALLATION

INSTALLATION CONFIGURACIÓN INSTALLATION APPRONTAMENTO INSTALAÇÃO 设置

1

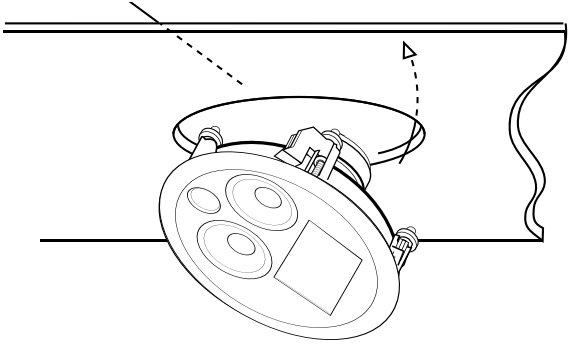

2

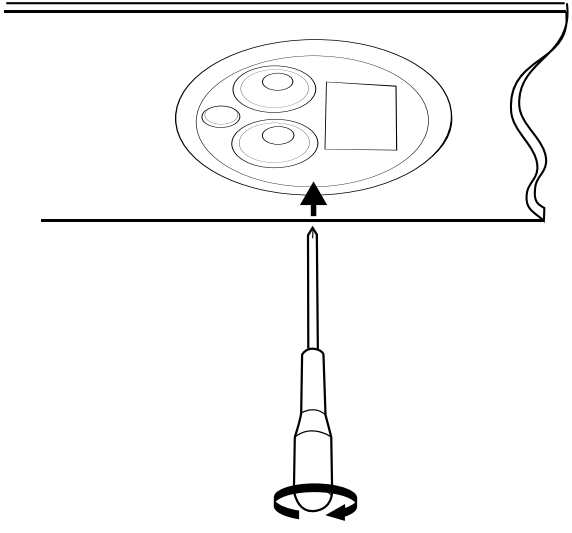

PAINTING

PEINDRE PINTAR MALEN PINTAR VERNICE 油漆

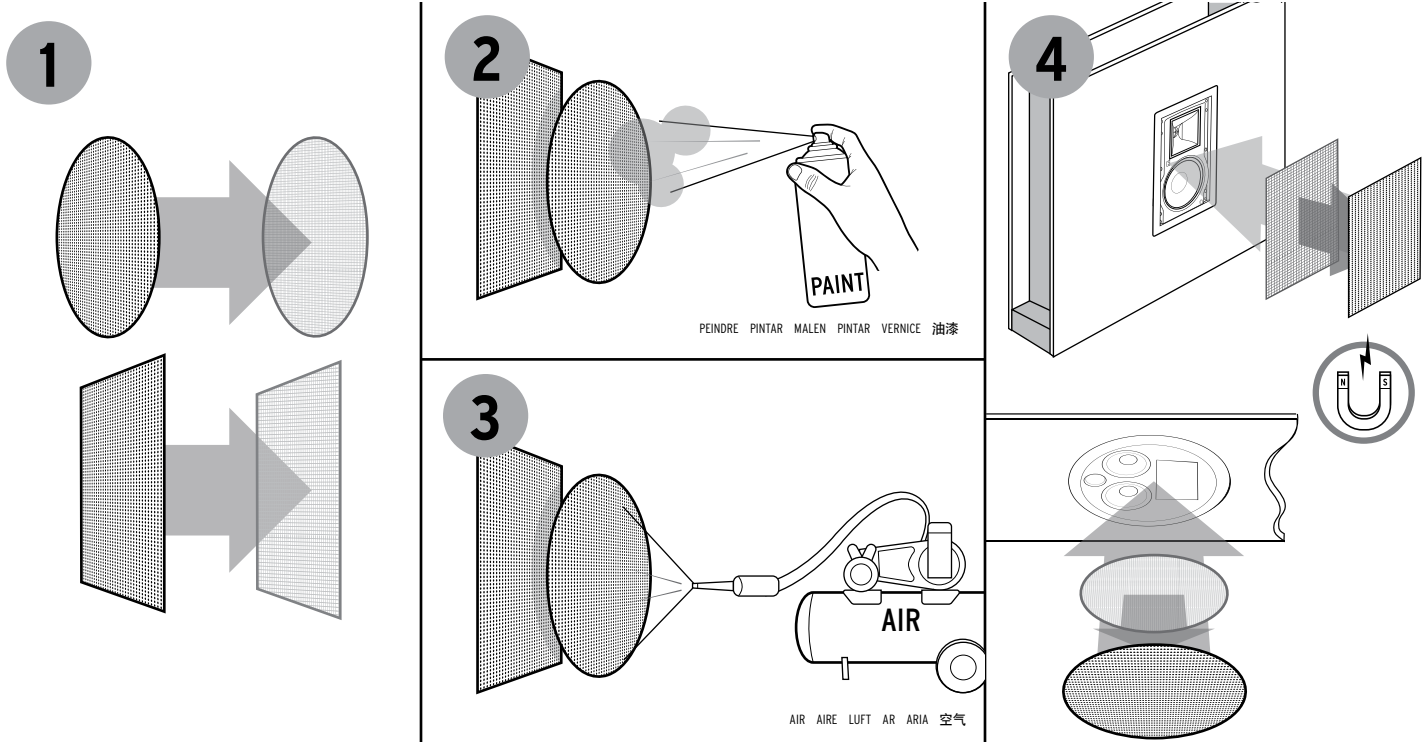

CARE AND CLEANING

ENTRETIEN ET NETTOYAGE CUIDADO Y LIMPIEZA PFLEGE UND REINIGUNG CURA E PULIZIA CUIDADOS E LIMPEZA 保养与清洁

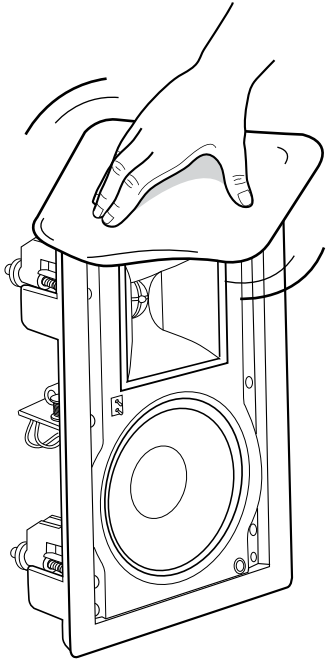

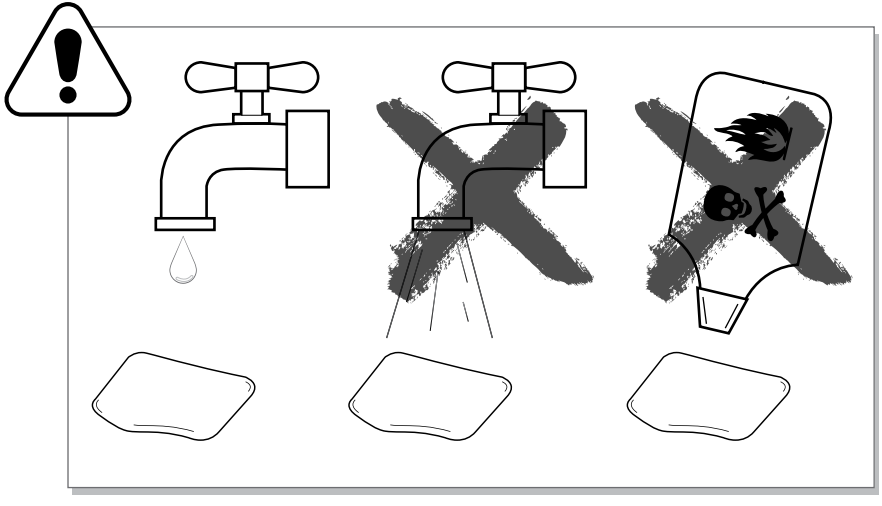



Klipsch®

KEEPERS OF THE SOUND®

3502 WOODVIEW TRACE, INDIANAPOLIS, IN, USA

KLIPSCH.COM

1-800-KLIPSCH ©2014 KLIPSCH GROUP, INC. ALL RIGHTS RESERVED. KLIPSCH AND KEEPERS OF THE SOUND ARE REGISTERED TRADEMARKS OF KLIPSCH GROUP, INC. IN THE USA AND OTHER COUNTRIES.
A WHOLLY-OWNED SUBSIDIARY OF VOXX INTERNATIONAL CORPORATION.

V02-0512