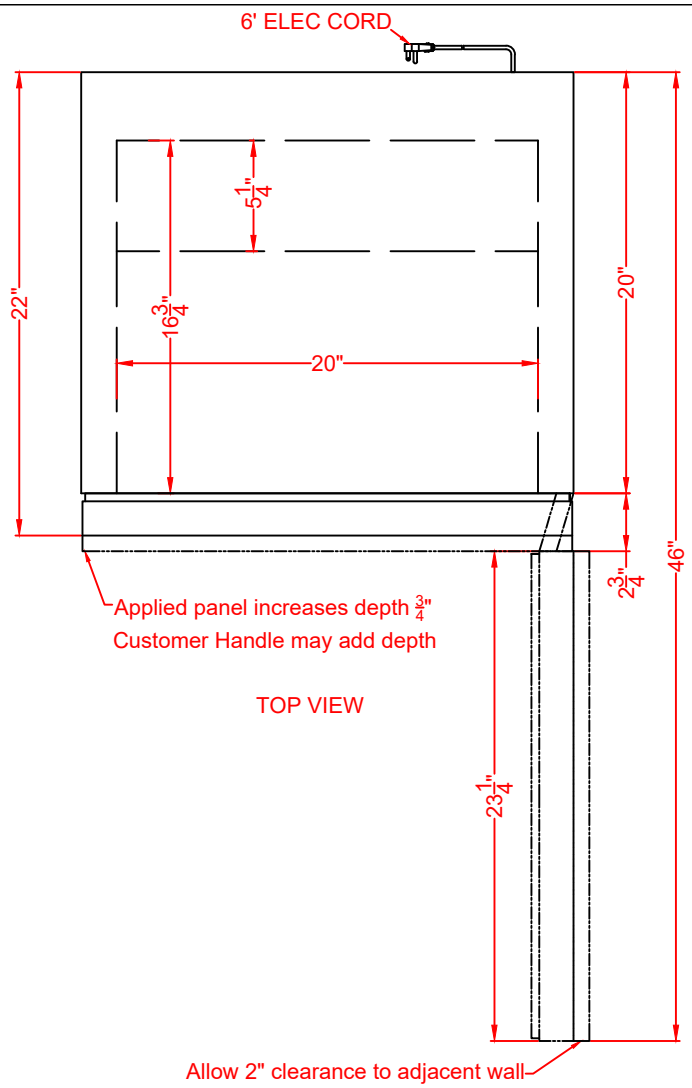

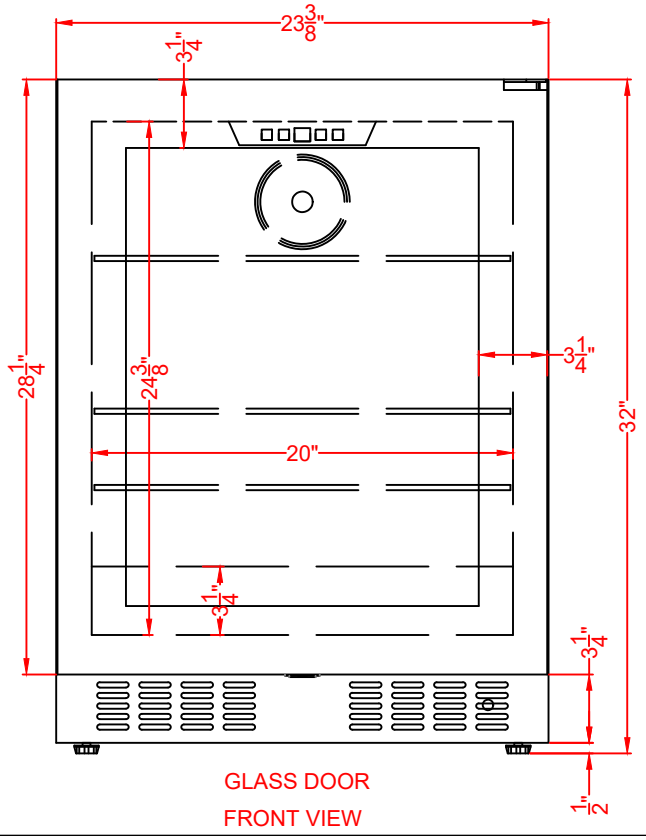

AL57GPNR

Refrigerator

07/17/23

SUMMIT
FELIX STORCH, INC.
www.summitappliance.com
718-893-3900