# JULIETTE STORAGE PLATFORM BED

## FULL/QUEEN ASSEMBLY INSTRUCTIONS

MODUS FURNITURE

## PARTS AND PACKAGING DETAIL

### BOX #1

A. HEADBOARD 1 PC
B. LEG 2 PCS

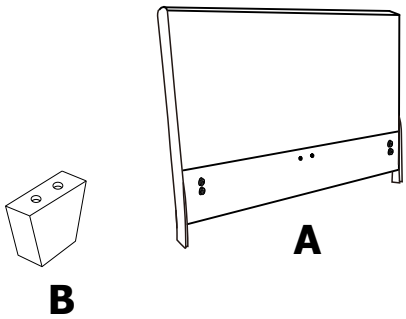


### BOX #2

C. FOOTBOARD 1 PC
D. SIDE RAIL 2 PCS
E. FOOTBOARD LEG 2 PCS
F. CENTER SLAT SUPPORT 1 PC
G. CENTER SUPPORT LEG 2 PCS
H. SLAT 26 PCS
I. SIDE RAIL SLAT CLIP 26 PCS
J. CENTER SUPPORT SLAT CLIP 13 PCS
K. METAL SUPPORT LEG 1 PC
L. METAL SUPPORT BRACE 1 PC

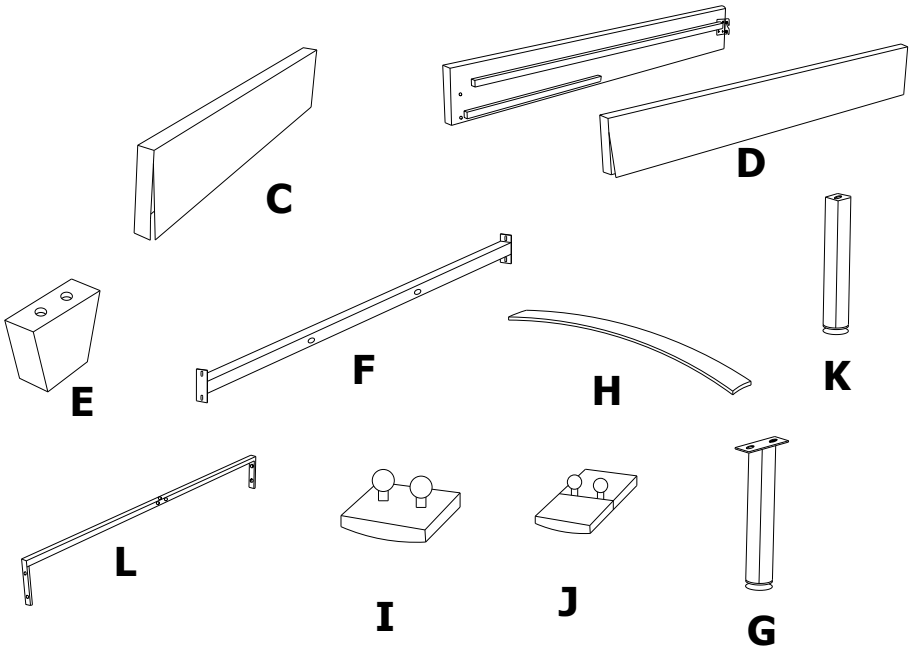


### BOX #3

M. DRAWER BOX 2 PCS

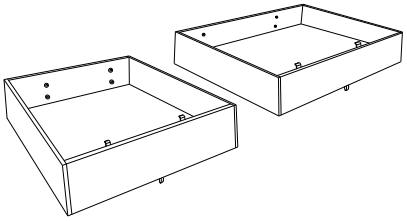

JULIETTE STORAGE BED ASSEMBLED

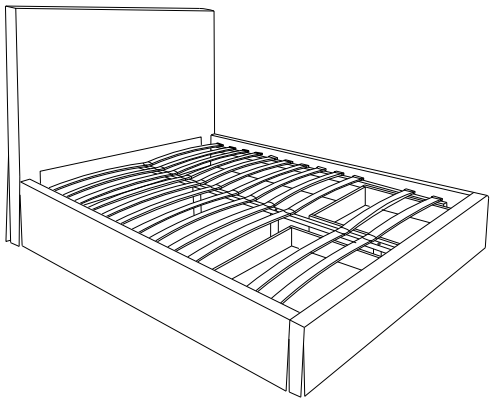

**HARDWARE PACKED IN BOX #1**

| 1 | ALLEN KEY 5/16 | 2 | ALLEN BOLT 5/16x3-1/4" | 3 | FLAT WASHER 5/16 | 4 | LOCK WASHER 5/16 |
|---|---|---|---|---|---|---|---|
| 1PC | | 4PCS | | 4PCS | | 4PCS | |

**HARDWARE PACKED IN BOX #2**

| 5 | ALLEN KEY 5/16 | 6 | SPANNER 5/16 | 7 | ALLEN BOLT 5/16x1" | 8 | ALLEN BOLT 5/16x2-1/2" |
|---|---|---|---|---|---|---|---|
| 1PC | | 1PC | | 6PCS | | 11PCS | |
| 9 | ALLEN BOLT 5/16x3-1/4" | 10 | FLAT WASHER 5/16 | 11 | LOCK WASHER 5/16 | 12 | HEX NUT 5/16 |
| 2PCS | | 25PCS | | 25PCS | | 6PCS | |

**HARDWARE PACKED IN BOX #3**

| 13 | ALLEN KEY 1/4" | 14 | ALLEN BOLT 1/4"x1-1/4" | 15 | FLAT WASHER 5/16 | 16 | LOCK WASHER 5/16 |
|---|---|---|---|---|---|---|---|
| 1PC | | 8PCS | | 8PCS | | 8PCS | |

YOUR BED MAY CONTAIN EXTRA HARDWARE

UPDATED : SEPTEMBER 7TH, 2019

**STEP 1 :**

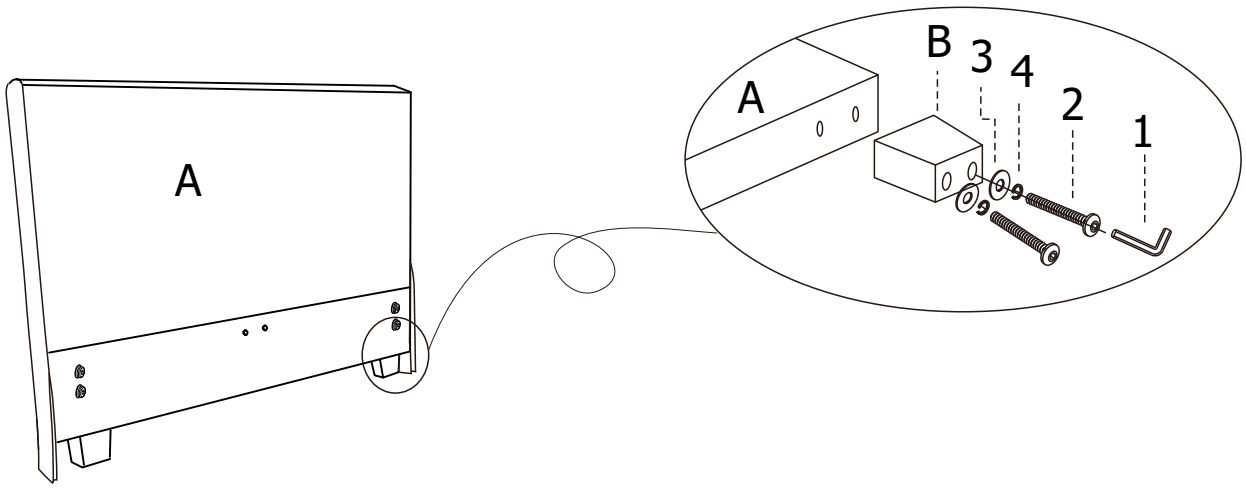


**STEP 2 :**

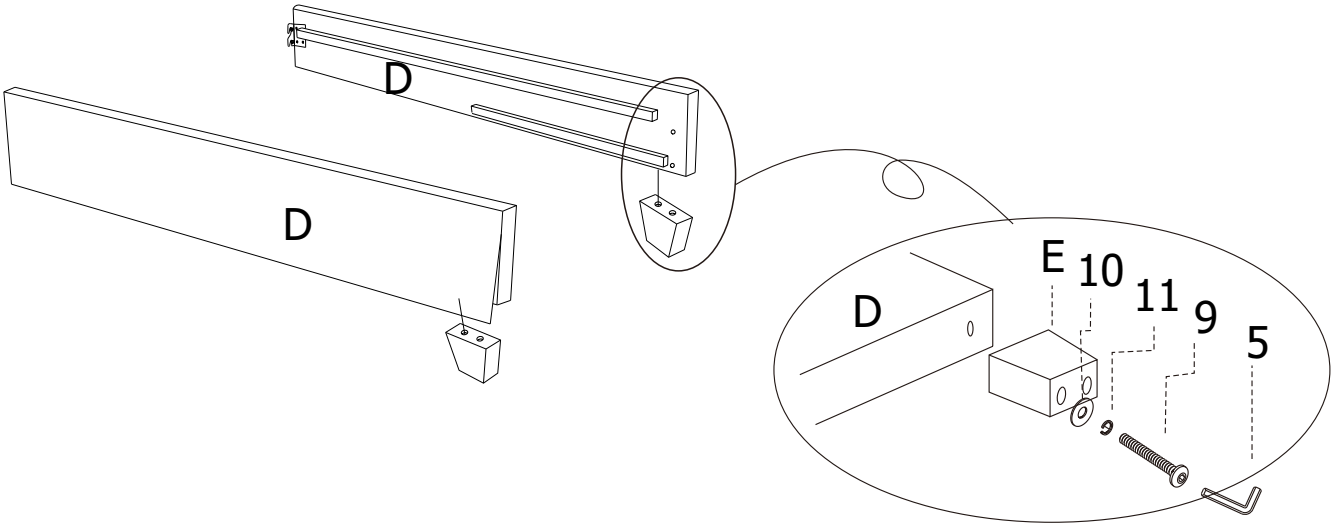


**STEP 3 :**

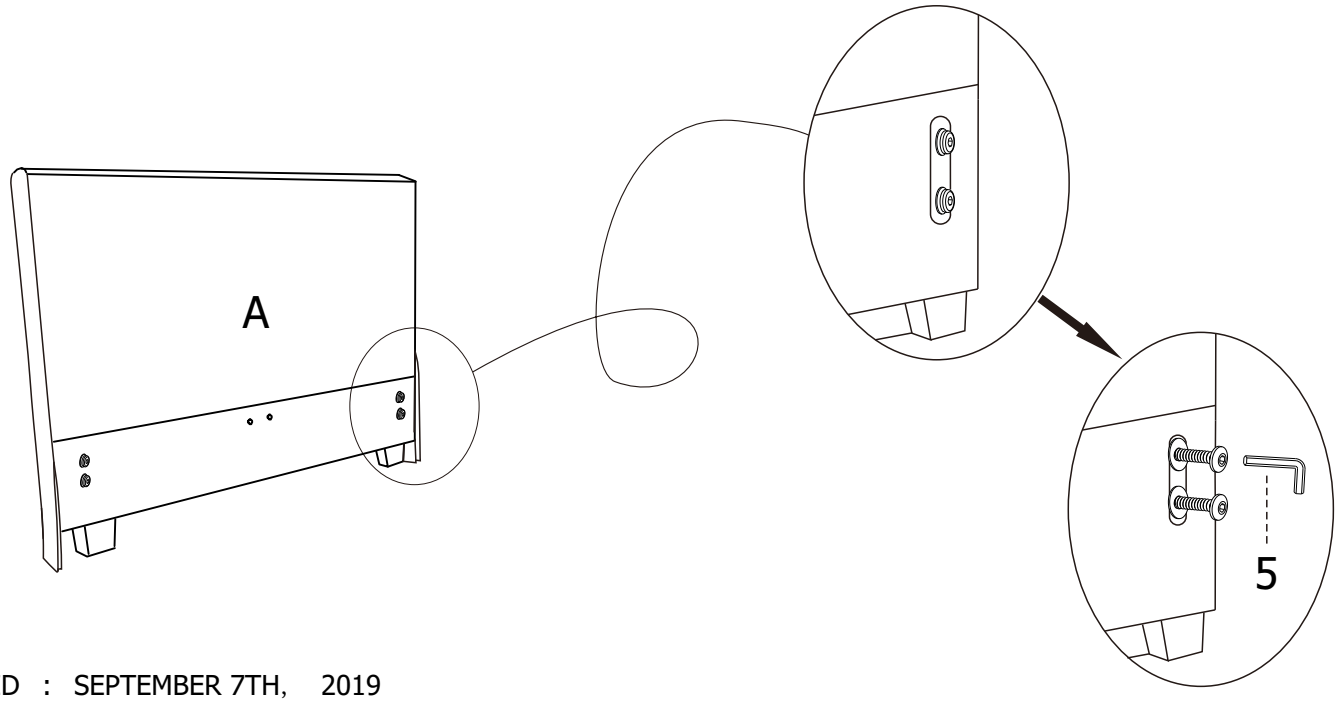


UPDATED : SEPTEMBER 7TH, 2019

**STEP 4 :**

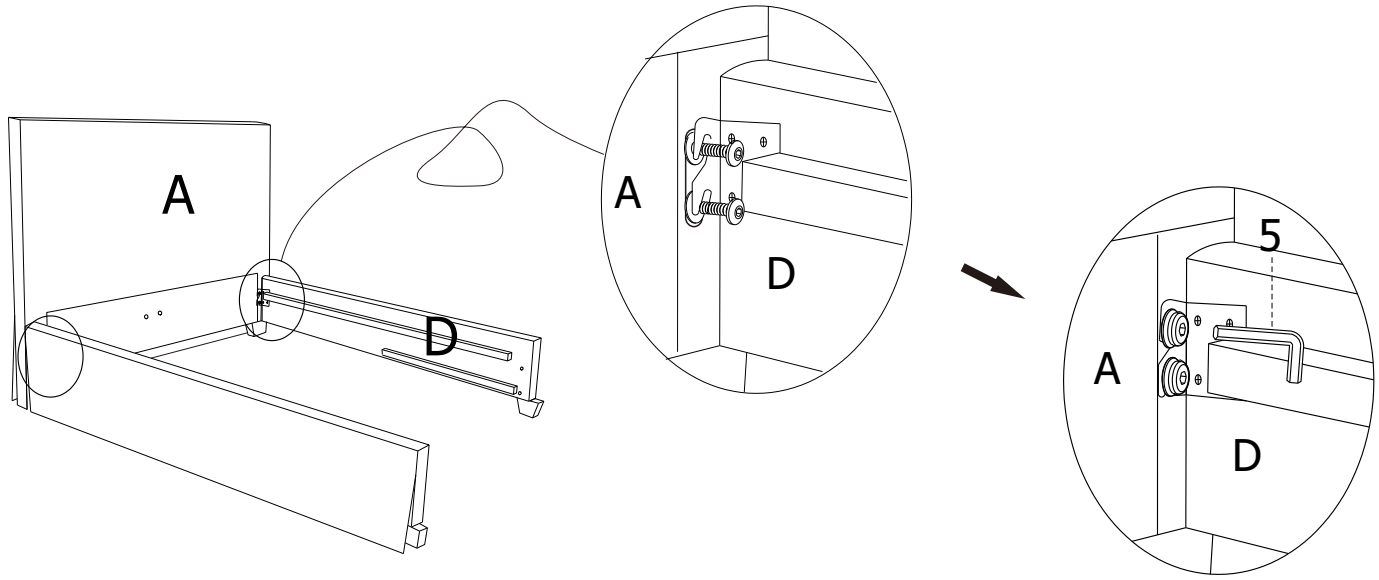


**STEP 5 :**

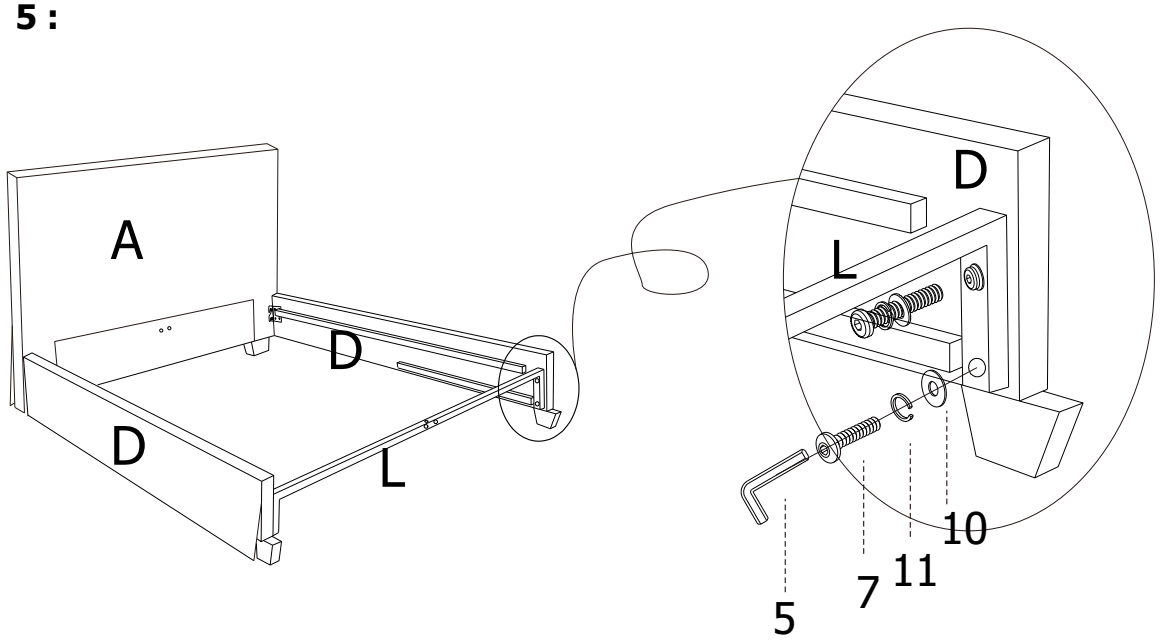


**STEP 6 :**

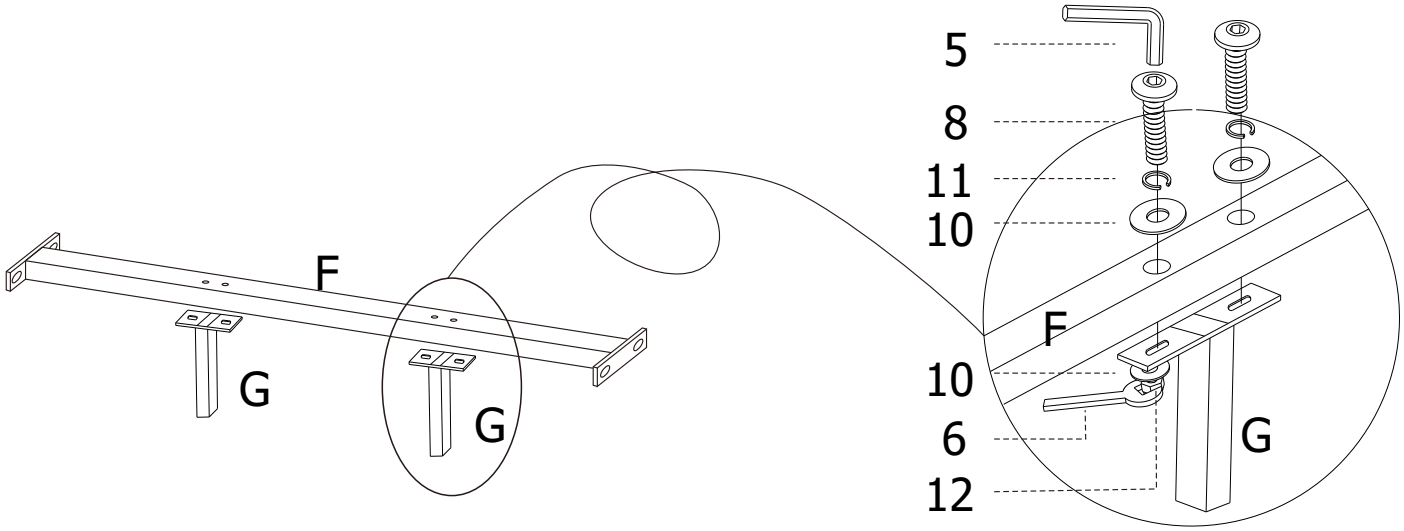


UPDATED : SEPTEMBER 7TH, 2019

**STEP 7 :**

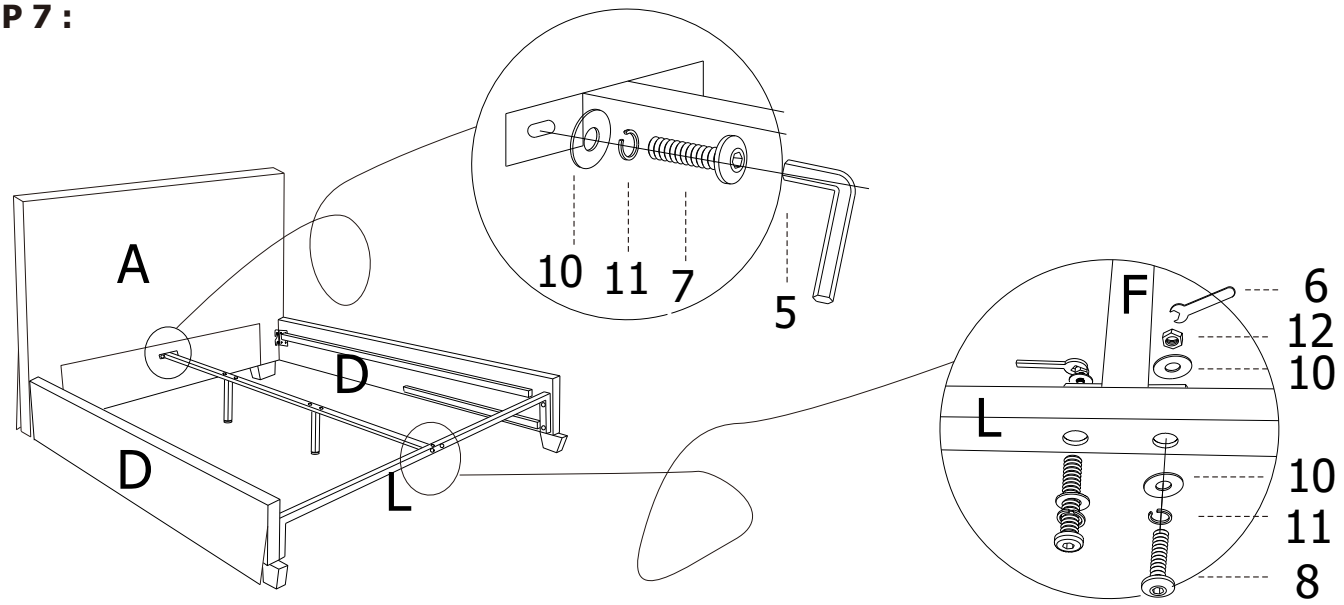


**STEP 8 :**

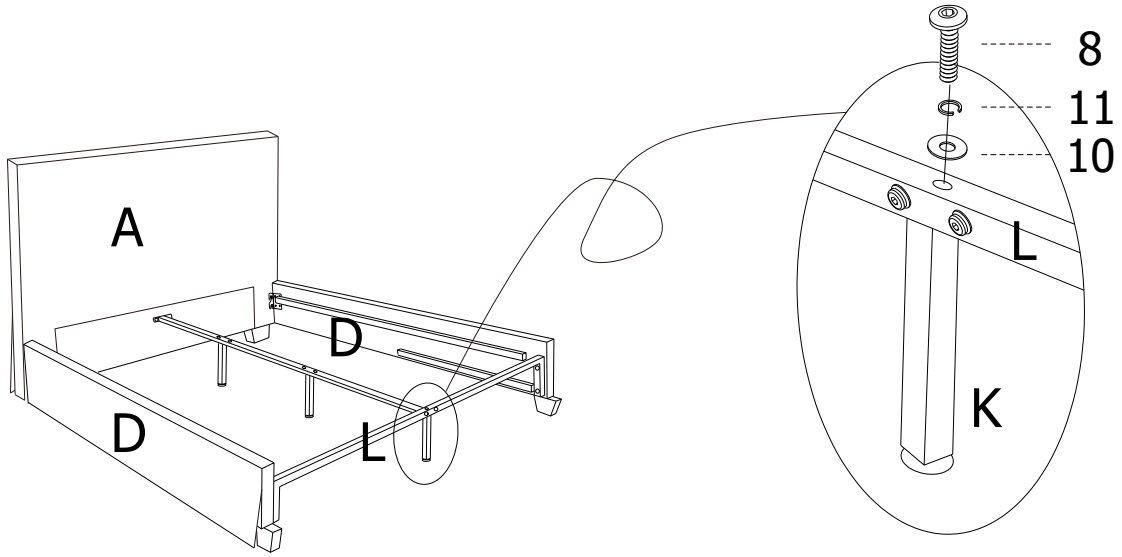


**STEP 9 :STARTING FROM HEADBOARD**

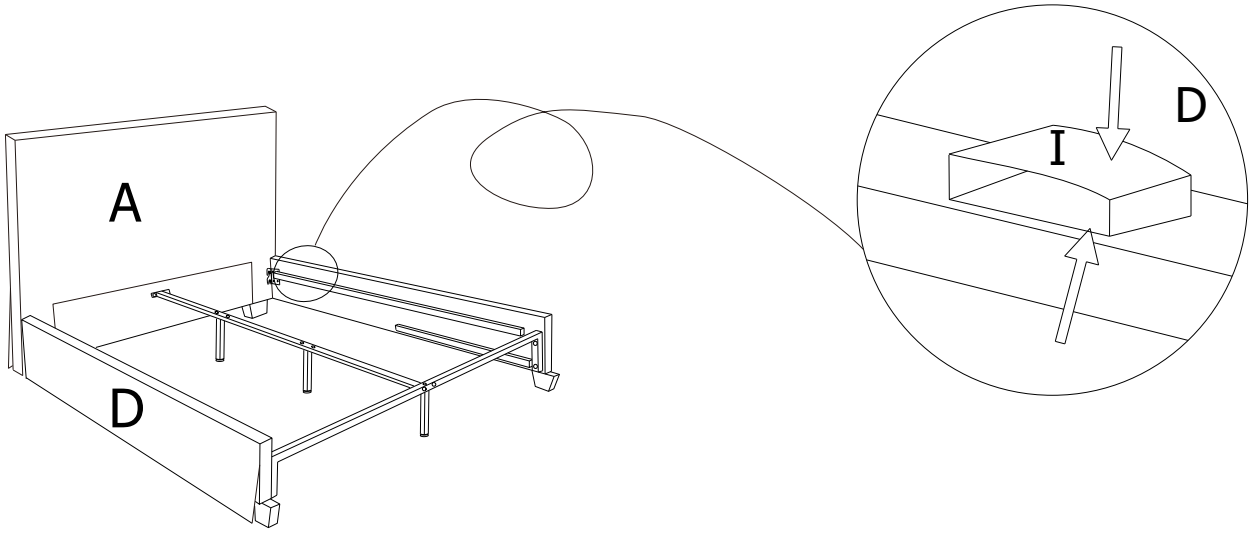


UPDATED : SEPTEMBER 7TH, 2019

**STEP 10 :**

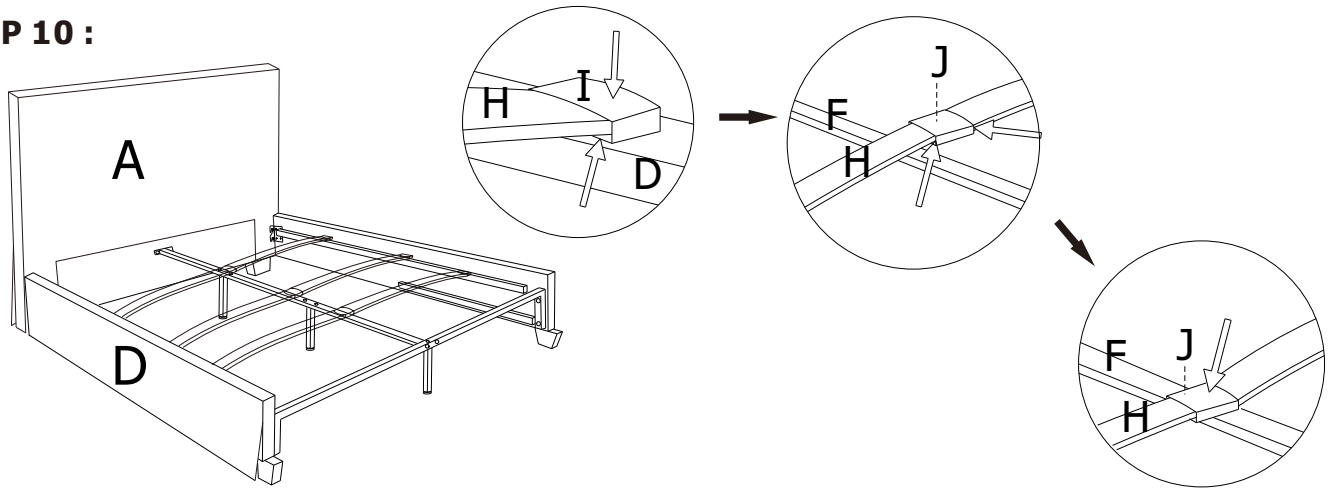


**STEP 11 :**

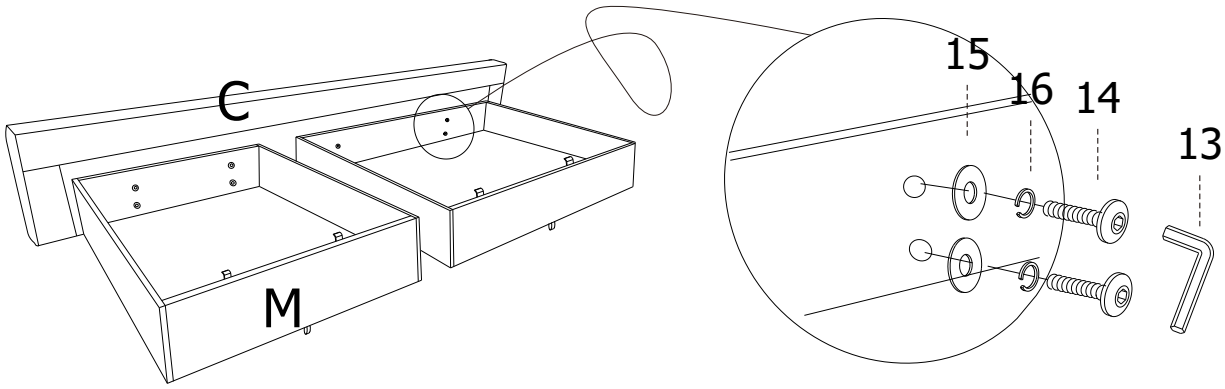


**STEP 12 :FOR FABRIC TO LAY CORRECTLY CUT THREADS SECURING PLEATS.**

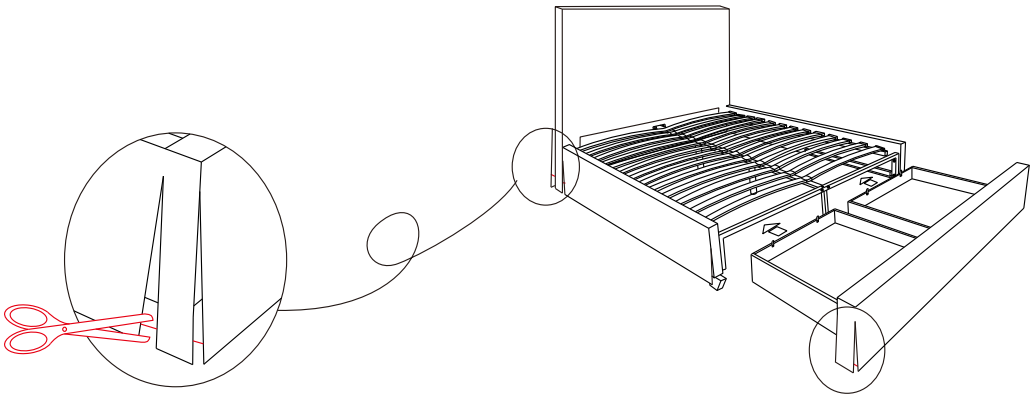

## INSTRUCTIONS FOR ADJUSTING LEVELERS :

POSITION THE BED IN YOUR ROOM. LOCATE LEVELERS UNDER EACH SUPPORT LEG（G/K）.

TURN COUNTER-CLOCKWISE TO EXTEND, CLOCKWISE TO CONTRACT.

ADJUST LEVELERS UNTIL EACH LEG SUPPORT IS APPLYING EQUAL UPWARD PRESSURE ON THE CENTER SLAT.

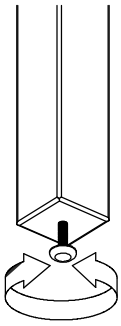

## MAINTENANCE INSTRUCTIONS :

- REMOVE BOX SPRING AND MATTRESS BEFORE MOVING YOUR BED.
- LIFT YOUR BED WHEN MOVING IT. DRAGGING CAN DAMAGE CENTER SUPPORT.
- READJUST LEVELERS AFTER MOVING YOUR BED.

UPDATED : SEPTEMBER 7TH, 2019

# JULIETTE STORAGE PLATFORM BED

## C.KING/E.KING ASSEMBLY INSTRUCTIONS

MODUS FURNITURE

## PARTS AND PACKAGING DETAIL

### BOX #1

A. HEADBOARD 1 PC
B. LEG 2 PCS

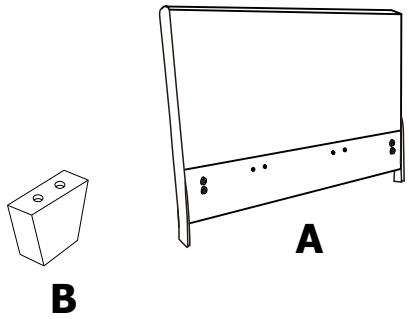


### BOX #2

| | | | |
|---|---|---|---|
| C. FOOTBOARD | 1 PC | H. SLAT | 39 PCS |
| D. SIDE RAIL | 2 PCS | I. SIDE RAIL SLAT CLIP | 26 PCS |
| E. FOOTBOARD LEG | 2 PCS | J. CENTER SUPPORT SLAT CLIP | 26 PCS |
| F. CENTER SLAT SUPPORT | 2 PCS | K. METAL SUPPORT LEG | 1 PC |
| G. CENTER SUPPORT LEG | 4 PCS | L. METAL SUPPORT BRACE | 1 PC |

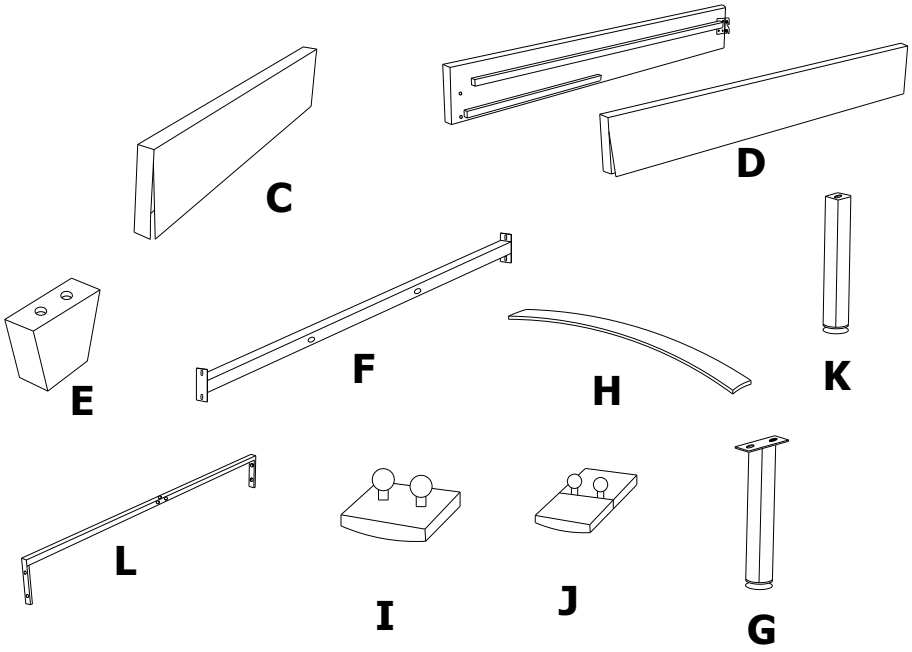


### BOX #3

M. DRAWER BOX 2 PCS

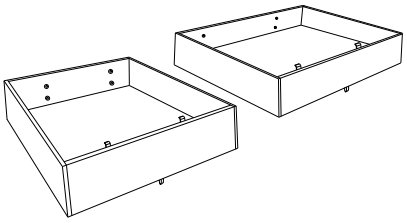

JULIETTE STORAGE BED ASSEMBLED

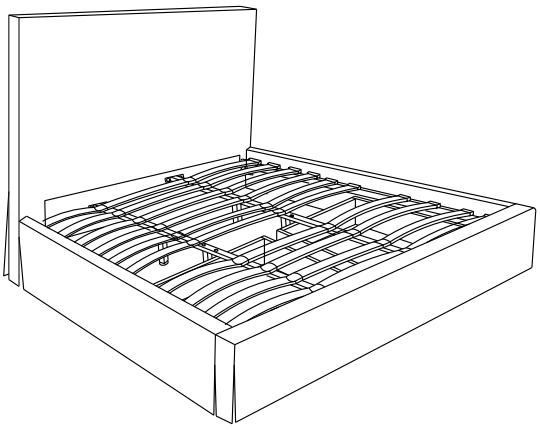

| HARDWARE PACKED IN BOX #1 | | | | | | | |
|---|---|---|---|---|---|---|---|
| 1 | ALLEN KEY 5/16 | 2 | ALLEN BOLT 5/16x3-1/4" | 3 | FLAT WASHER 5/16 | 4 | LOCK WASHER 5/16 |
| 1PC | | 4PCS | | 4PCS | | 4PCS | |

| HARDWARE PACKED IN BOX #2 | | | | | | | |
|---|---|---|---|---|---|---|---|
| 5 | ALLEN KEY 5/16 | 6 | SPANNER 5/16 | 7 | ALLEN BOLT 5/16x1" | 8 | ALLEN BOLT 5/16x2-1/2" |
| 1PC | | 1PC | | 8PCS | | 17PCS | |
| 9 | ALLEN BOLT 5/16x3-1/4" | 10 | FLAT WASHER 5/16 | 11 | LOCK WASHER 5/16 | 12 | HEX NUT 5/16 |
| 2PCS | | 39PCS | | 39PCS | | 12PCS | |

| HARDWARE PACKED IN BOX #3 | | | | | | | |
|---|---|---|---|---|---|---|---|
| 13 | ALLEN KEY 1/4" | 14 | ALLEN BOLT 1/4"x1-1/4" | 15 | FLAT WASHER 5/16 | 16 | LOCK WASHER 5/16 |
| 1PC | | 8PCS | | 8PCS | | 8PCS | |

YOUR BED MAY CONTAIN EXTRA HARDWARE

UPDATED : SEPTEMBER 7TH, 2019

**STEP 1 :**

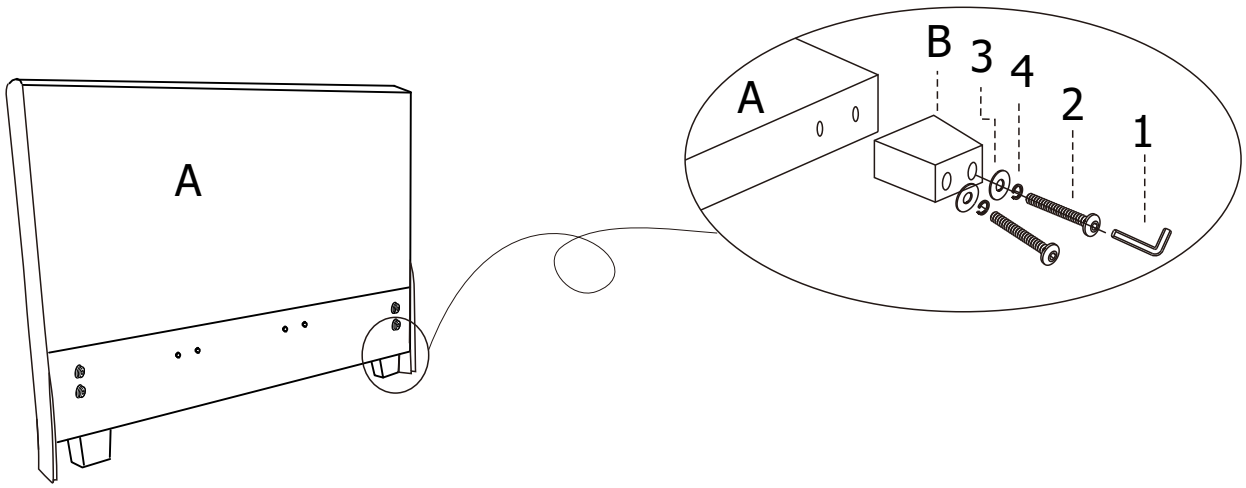


**STEP 2 :**

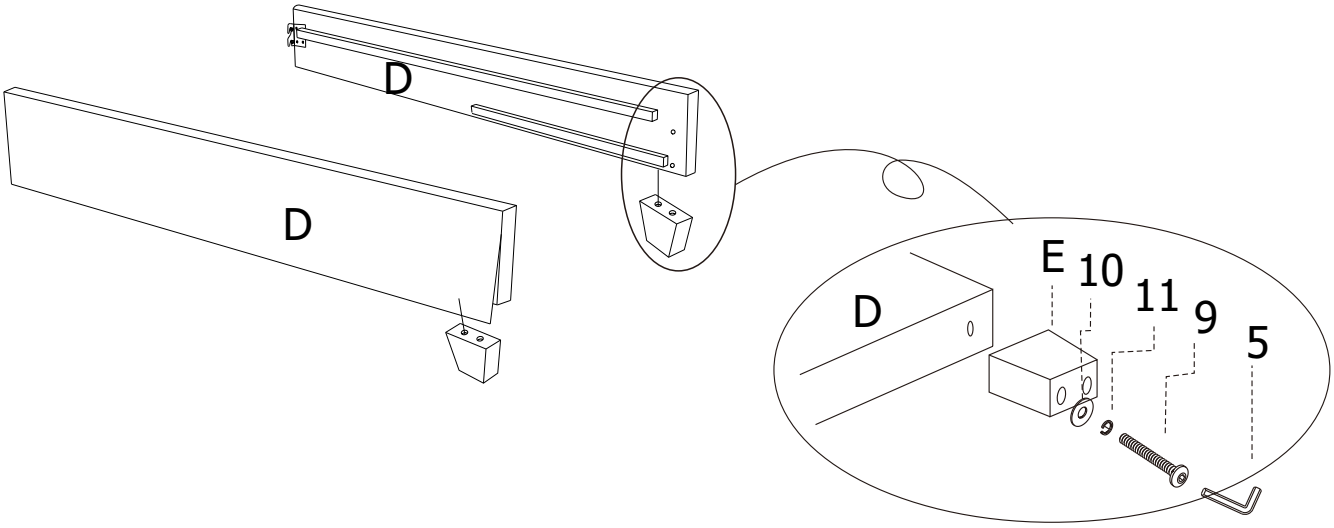


**STEP 3 :**

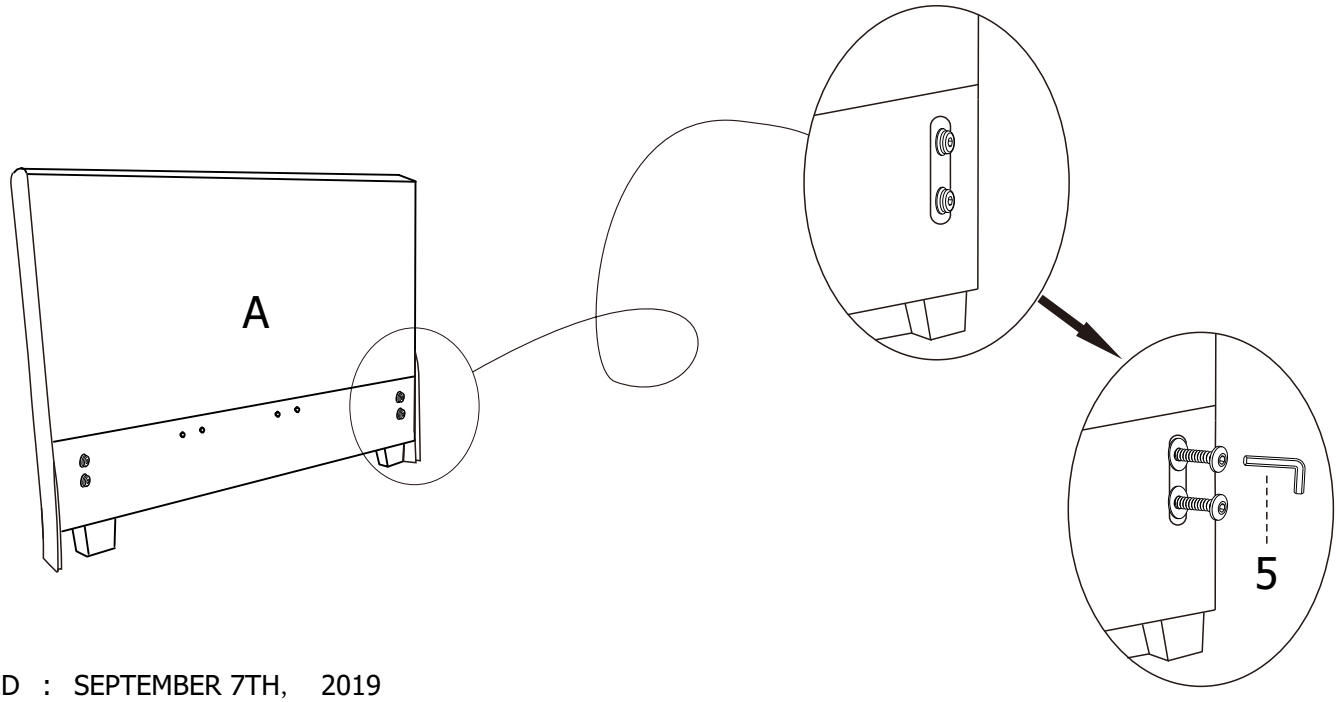


UPDATED : SEPTEMBER 7TH, 2019

**STEP 4 :**

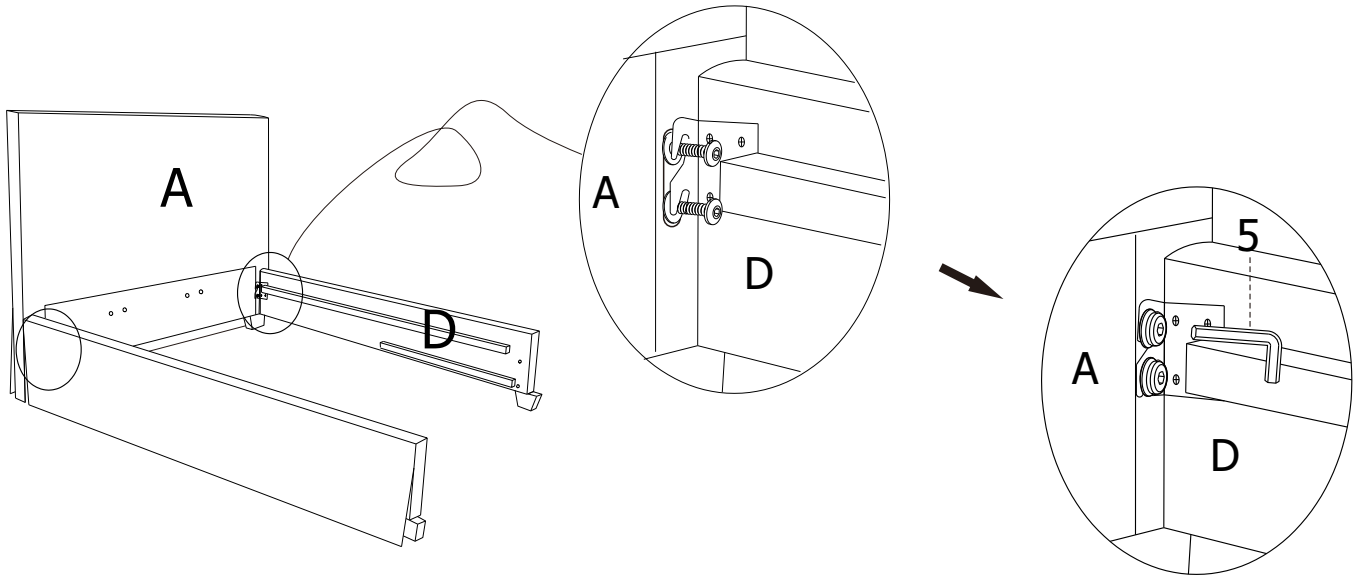


**STEP 5 :**

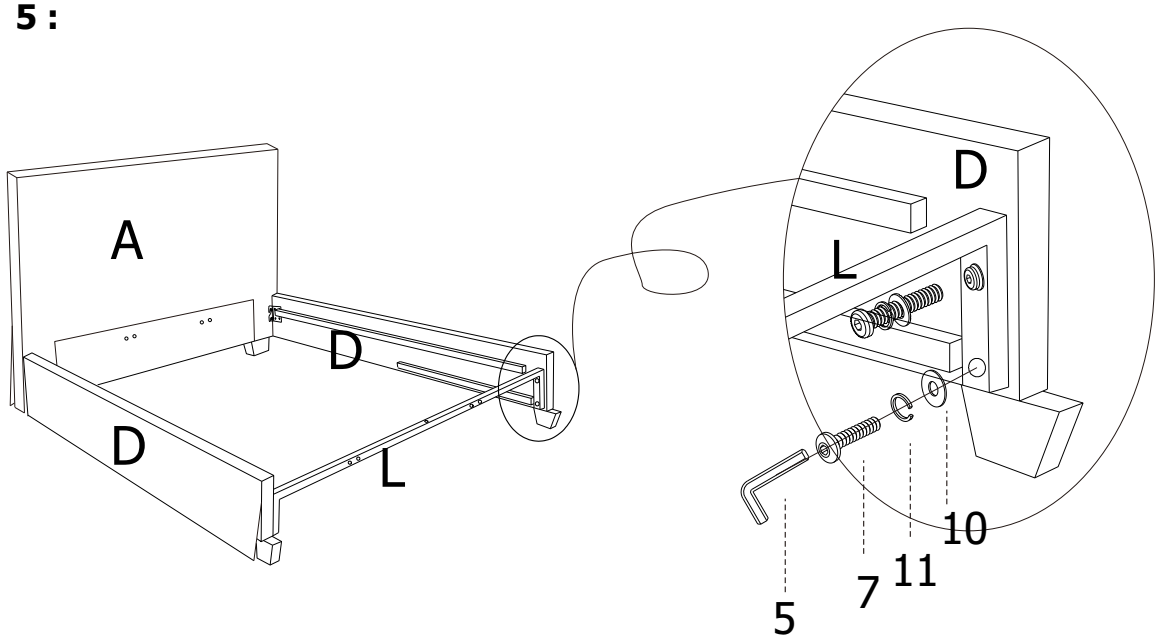


**STEP 6 :**

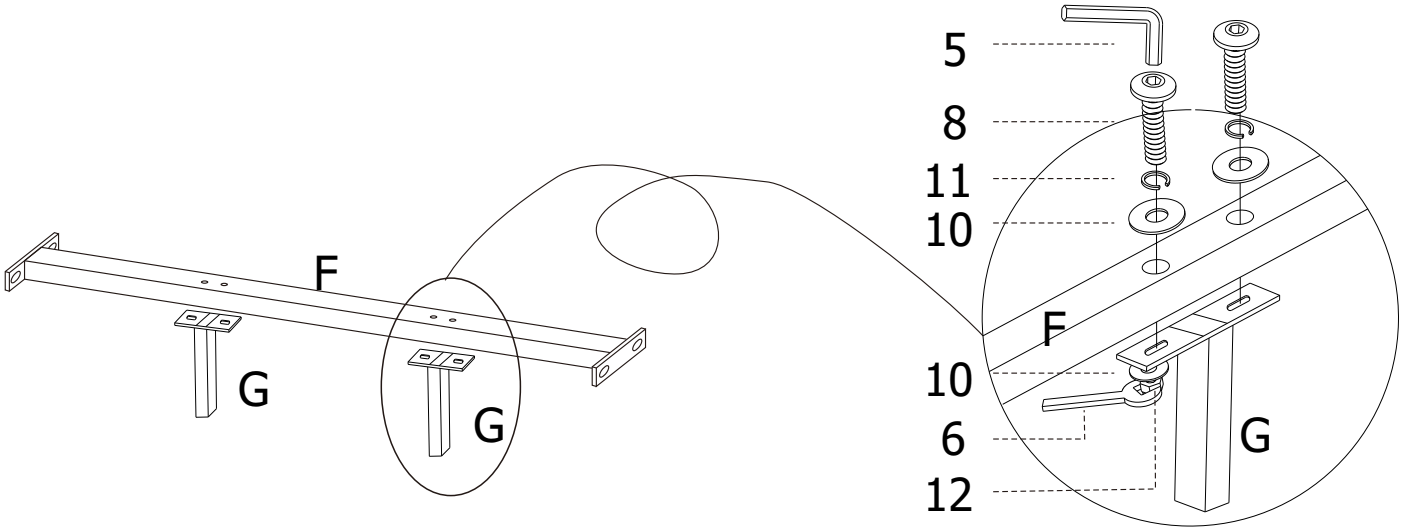


UPDATED : SEPTEMBER 7TH, 2019

**STEP 7 :**

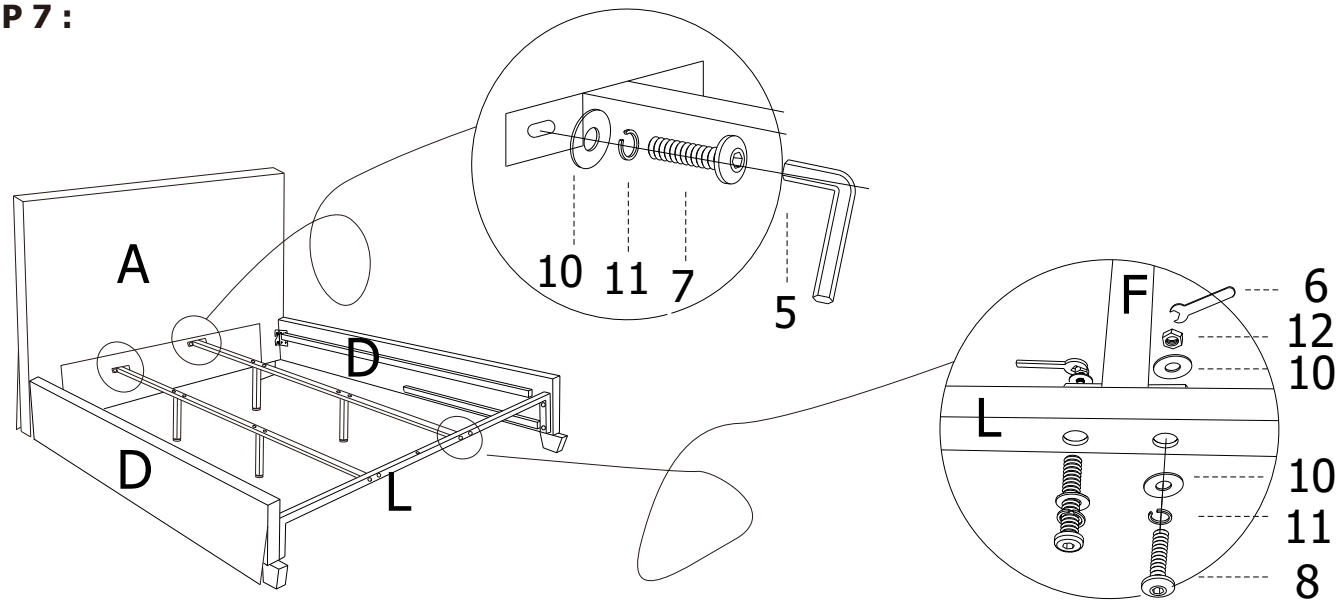


**STEP 8 :**

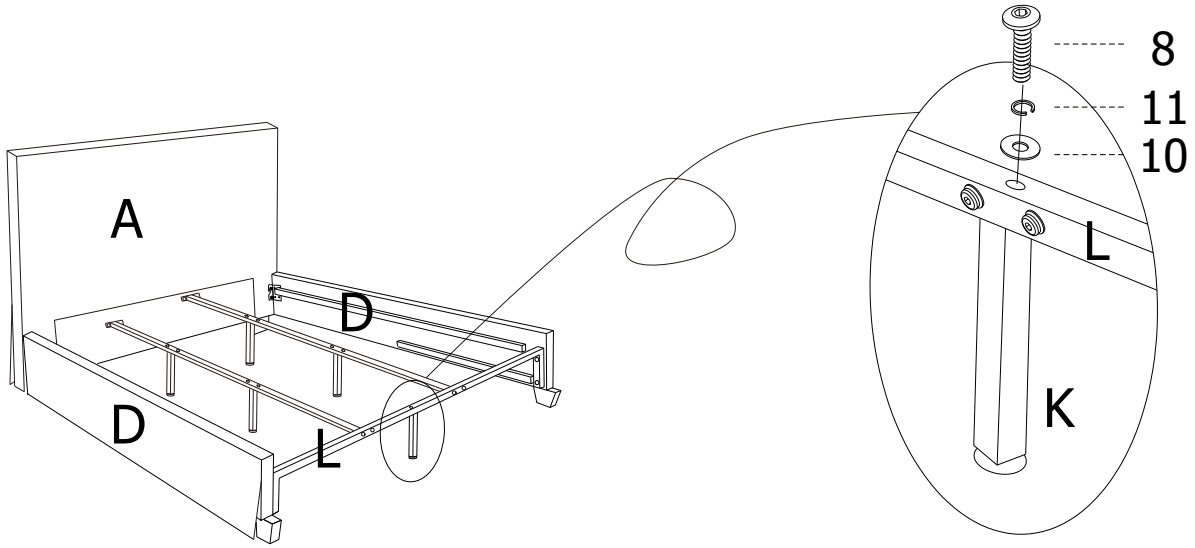


**STEP 9 :STARTING FROM HEADBOARD**

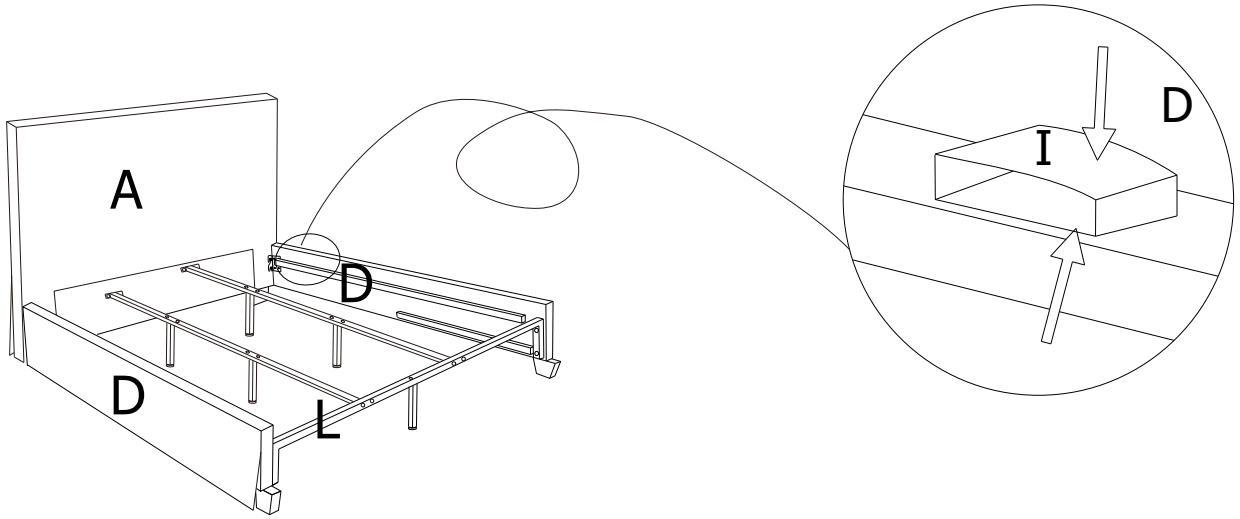


UPDATED : SEPTEMBER 7TH, 2019

**STEP 10 :**

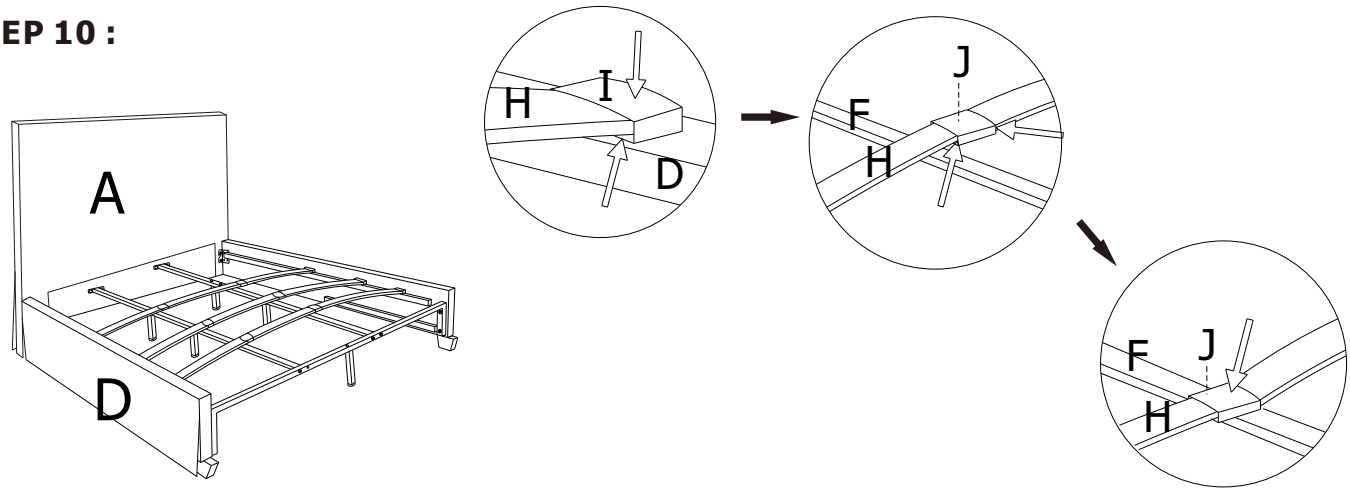


**STEP 11 :**

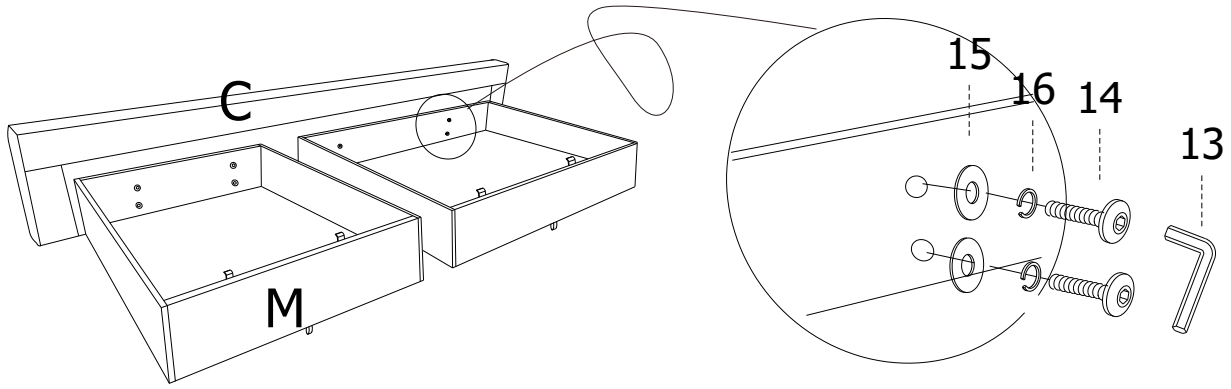


**STEP 12 :FOR FABRIC TO LAY CORRECTLY CUT THREADS SECURING PLEATS.**

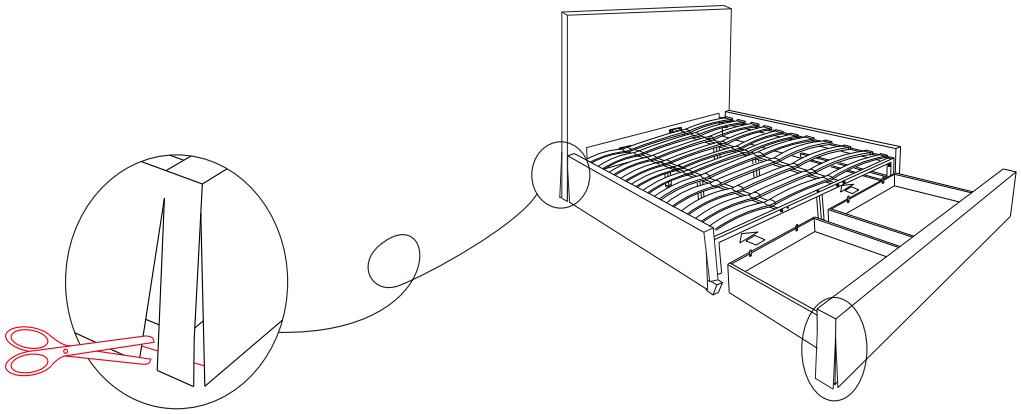

## INSTRUCTIONS FOR ADJUSTING LEVELERS :

POSITION THE BED IN YOUR ROOM. LOCATE LEVELERS UNDER EACH SUPPORT LEG（G/K）.

TURN COUNTER-CLOCKWISE TO EXTEND, CLOCKWISE TO CONTRACT.

ADJUST LEVELERS UNTIL EACH LEG SUPPORT IS APPLYING EQUAL UPWARD PRESSURE ON THE CENTER SLAT.

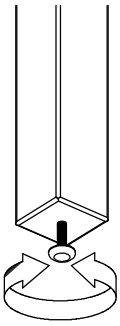

## MAINTENANCE INSTRUCTIONS :

- REMOVE BOX SPRING AND MATTRESS BEFORE MOVING YOUR BED.
- LIFT YOUR BED WHEN MOVING IT. DRAGGING CAN DAMAGE CENTER SUPPORT.
- READJUST LEVELERS AFTER MOVING YOUR BED.

UPDATED : SEPTEMBER 7TH, 2019