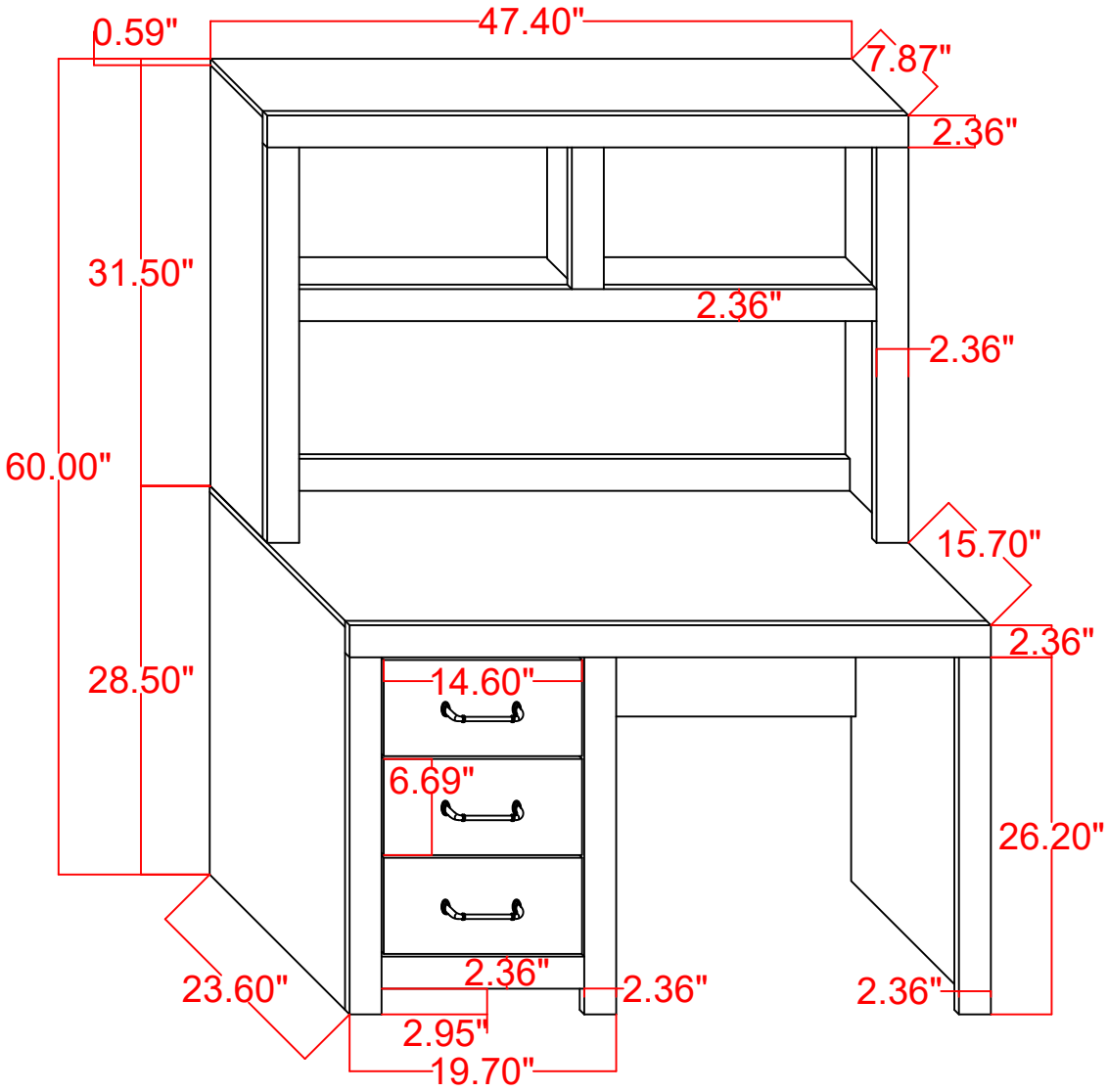
0.59"
47.40"
7.87"
2.36"
31.50"
2.36"
2.36"
60.00"
15.70"
2.36"
28.50"
14.60"
6.69"
26.20"
23.60"
2.36"
2.36"
2.36"
2.95"
19.70"

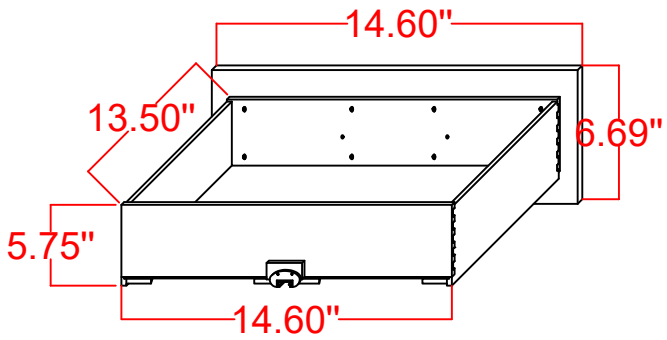
14.60"
13.50"
6.69"
5.75"
14.60"