ITEM #	QTY.	PART #	DESCRIPTION
1	2	02081	BEDLOCK

HIDDEN

VISIBLE

Dwg#: **33875**

ASHLEY Furniture Industries Inc.

Scale: 1:10

Date: 4/19/2011

TOLERANCES ARE:
METRIC---------- +.5 / -.5mm
DECIMAL---------- 0 / -.005"
FRACTIONAL---------- +0/ -1/32"
(UNLESS OTHERWISE SPECIFIED)

Desc: Footboard CS

Work Order: XXXXXXXX
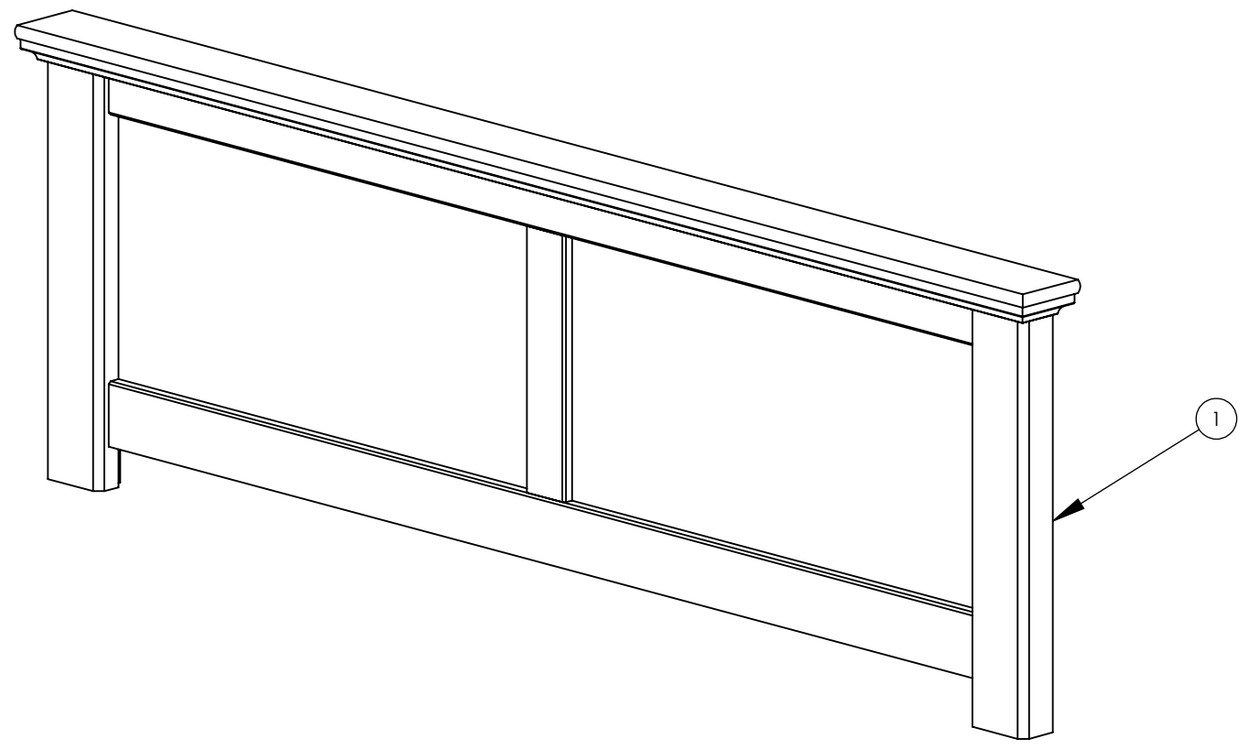
Rev.	Description	Date	Cad/Eng