A671

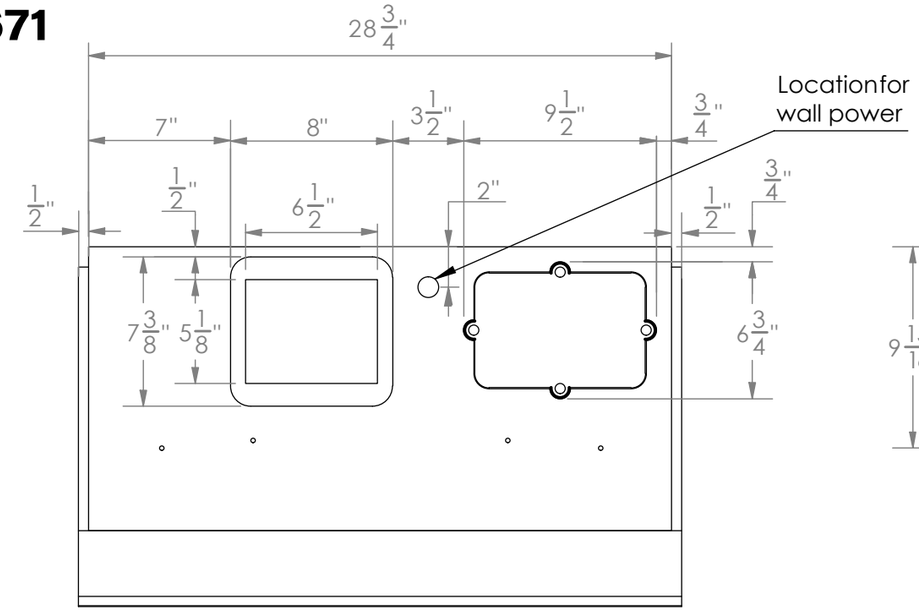

TOP - OPENING DIMENSIONS

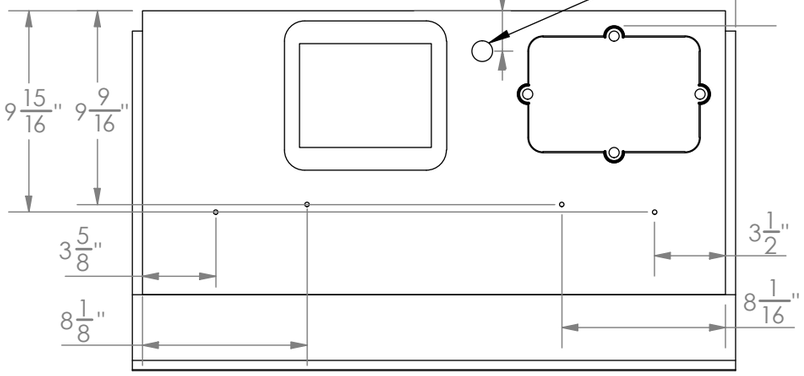

TOP - FIXING HOLE LOCATIONS

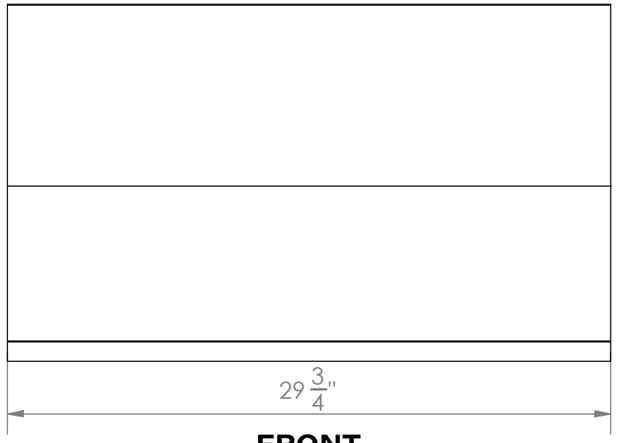

FRONT

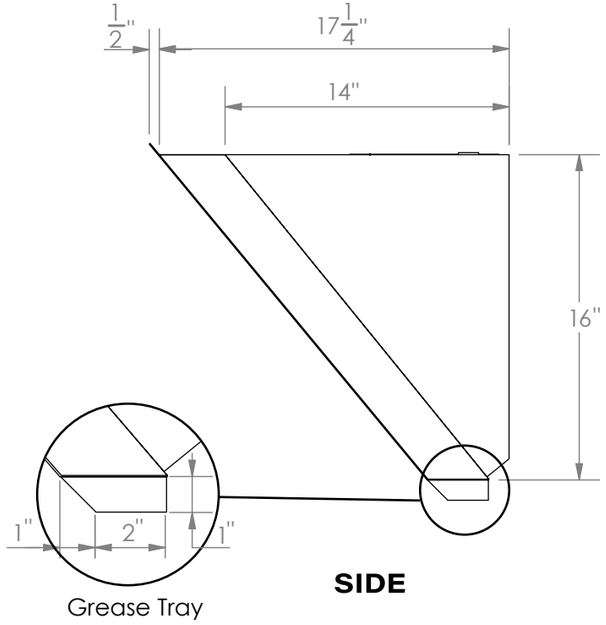

SIDE

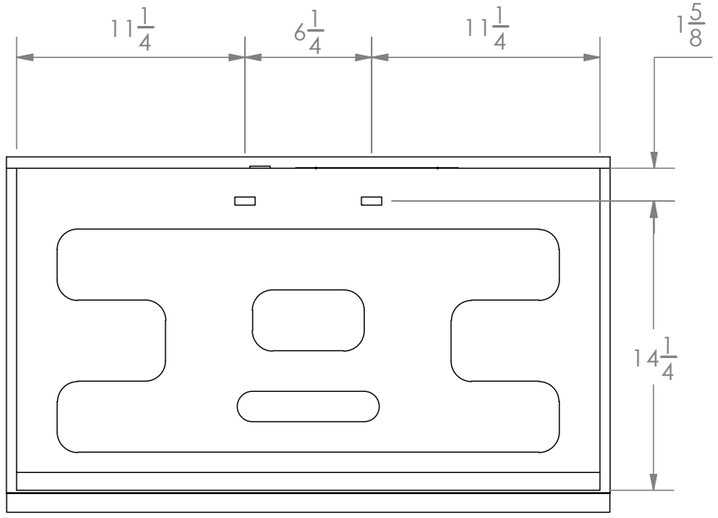

BACK

All measurements are in inches