Product Assembly Instructions

Item# : LCGNDIWA - GINA DINING TABLE

Helpers needed to assemble: 2
Estimate time frame to assemble: 10 minutes

Thank you for purchasing this quantity product. Be sure to check all packing material carefully for smalll parts, which may come loose inside the carton during shipment. Please identify and count all parts and compare with the HARDWARE LIST below.

Caution: Please read instructions carefully before unpacking assembly parts. Sharp, exposed staples can cause injury, therefore, for your protection, please remove any exposed staples used in packing.

*Keep the Allen Key and Tighten all screws each 3 months for safety concern!

1. We recommend to assemble this product with the assistance of another person. This will provide a smooth assembly process, and can help eliminate self injuries or damage to the product during assembly.
2. Please do not over tighten screws or bolts until the asssembly is completed.
3.Please put all parts on a smooth, flats surface before assembly, and carefully follow the assembly steps to assemble your newly purchased product correctly and efficiently.

#	Part List	QTY
A	Table Top	1
B	Table Leg	4

#	Hardware List	QTY
1	Jcbb Bolt M8 X 70mm	8
2	Spring Washer M8	8
3	Flat Washer M8	8
4	Allen Key	1

Step 1:

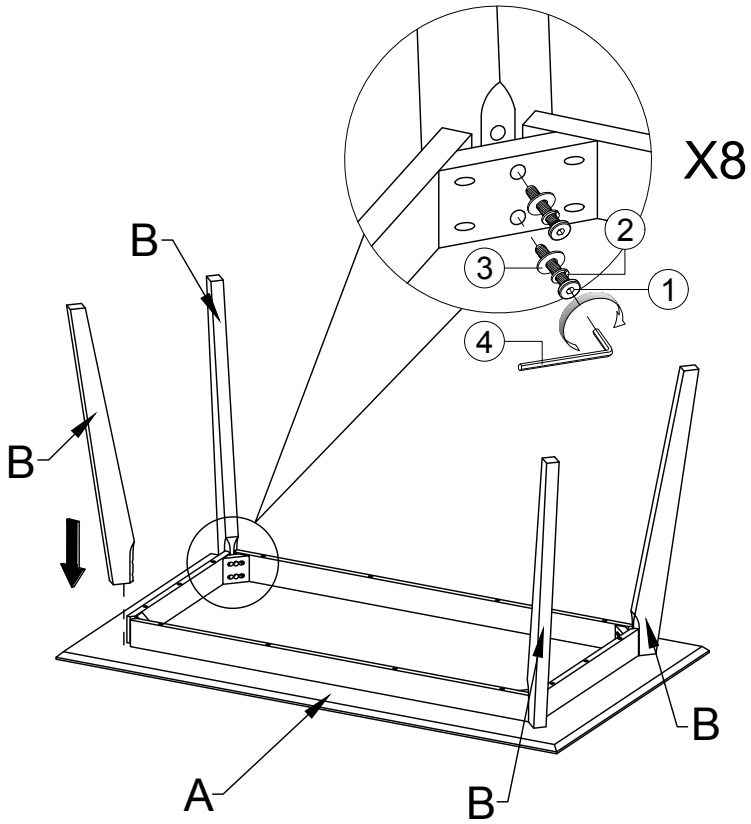

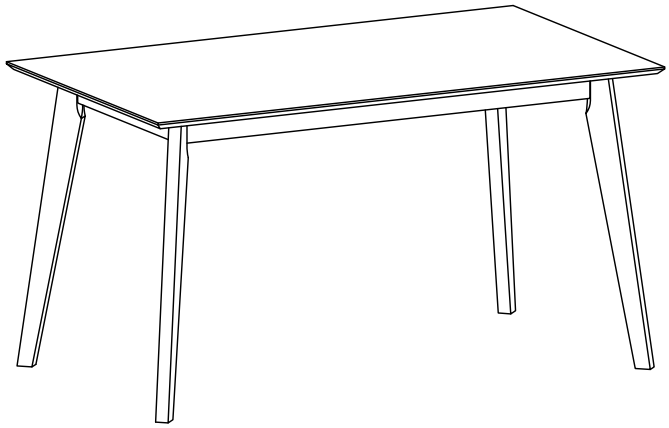

Version: 08-22-25

Product Assembly Instructions

Item# : LCGNSISAWA, LCGNSICHWA, LCGNSIOLWA & LCGNSIPPWA - GINA DINING CHAIR

Helpers needed to assemble: 2
Estimate time frame to assemble: 10 minutes

Thank you for purchasing this quantity product. Be sure to check all packing material carefully for smalll parts, which may come loose inside the carton during shipment. Please identify and count all parts and compare with the HARDWARE LIST below.

Caution: Please read instructions carefully before unpacking assembly parts. Sharp, exposed staples can cause injury, therefore, for your protection, please remove any exposed staples used in packing.

*Keep the Allen Key and Tighten all screws each 3 months for safety concern!

1. We recommend to assemble this product with the assistance of another person. This will provide a smooth assembly process, and can help eliminate self injuries or damage to the product during assembly.
2. Please do not over tighten screws or bolts until the asssembly is completed.
3.Please put all parts on a smooth, flats surface before assembly, and carefully follow the assembly steps to assemble your newly purchased product correctly and efficiently.

#	PART LIST	QTY
A	Seat	4
B	Lower Leg	4
C	Upper Leg	4
D	Leg Wood Block	8

#	HARDWARE LIST	QTY
1	Jcbc Bolt M6 X 60mm	16
2	Jcbc Bolt M6 X 40mm	4
3	Spring Washer M6	16
4	CSK Screw M4 X 28mm	32
5	Allen Key	1

*Phillips screwdriver not included

Step 1:

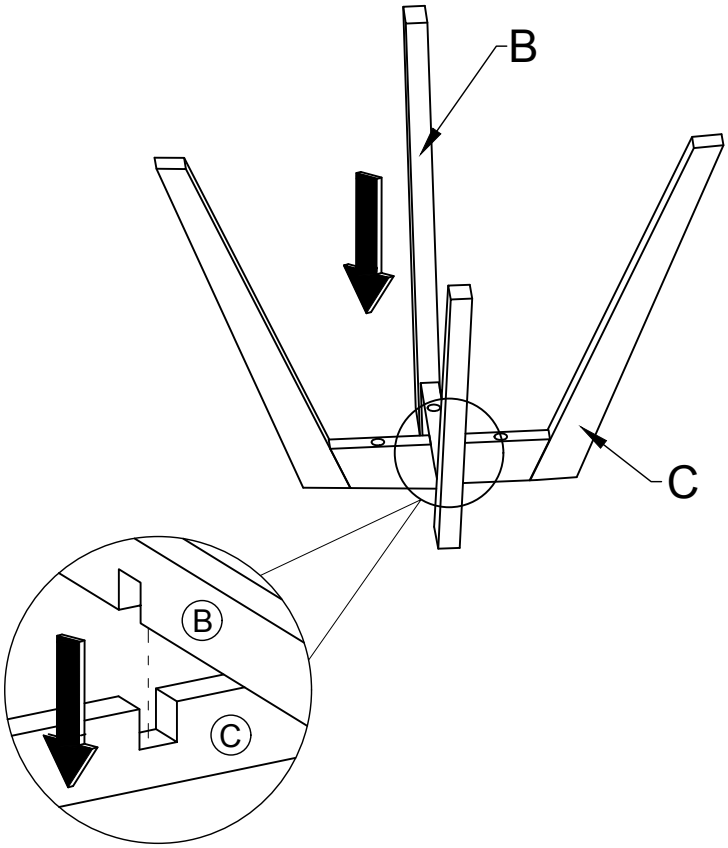

Step 2:

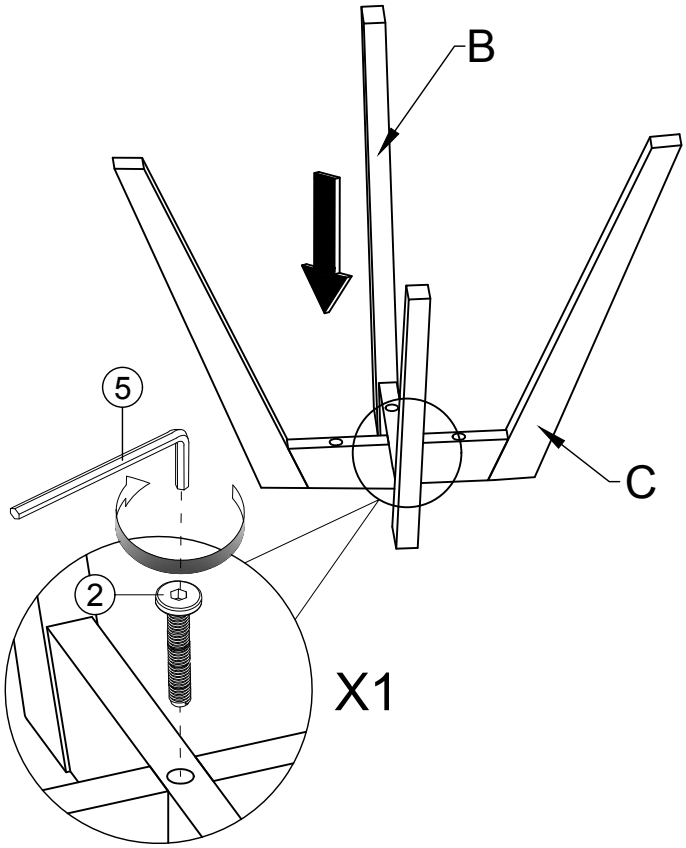

Product Assembly Instructions

Item# : LCGNSISAWA, LCGNSICHWA, LCGNSIOLWA & LCGNSIPPWA - GINA DINING CHAIR

Step 3:

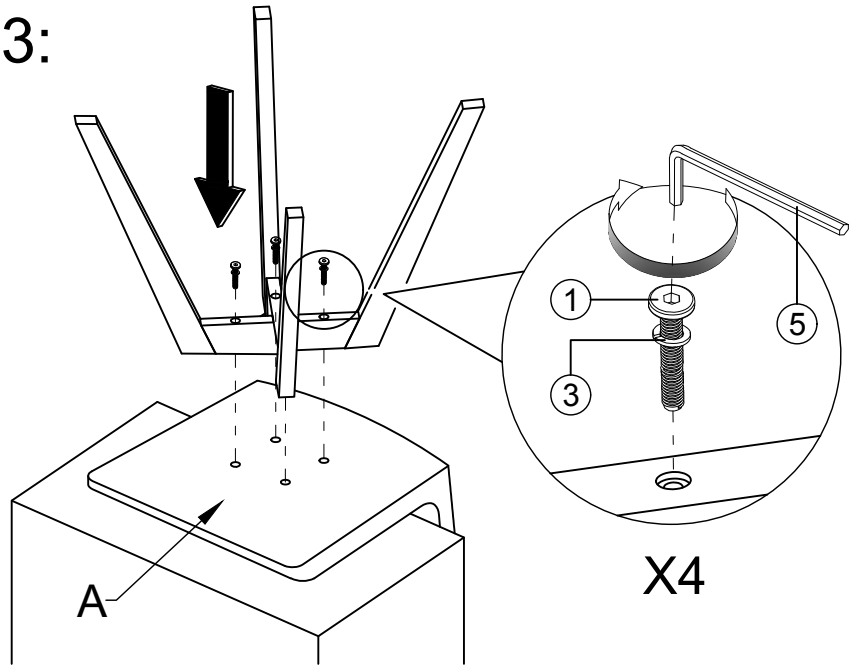

Step 4:

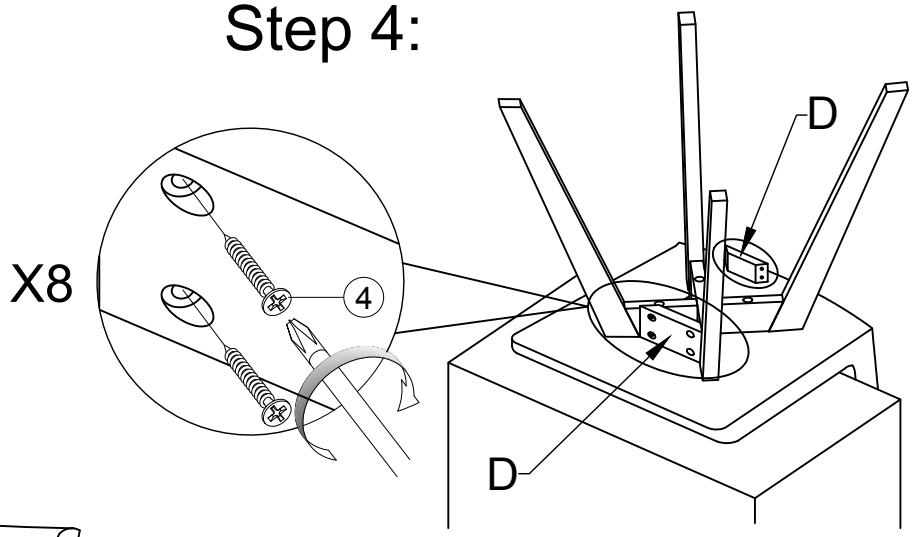

Version: 08-22-25