UTTERMOST
ASSEMBLY INSTRUCTIONS

STYLE: 25379

Hardware list

A		Allen Wrench 5mm	1pc
B		Bolt Ø5/16"*1"	10pcs
C		Spring Washer Ø5/16"	10pcs
D		Flat Washer Ø5/16"x19mm	10pcs

Parts list

1		Bench Top	1pc
2		Side Frame	2pcs

Step 1

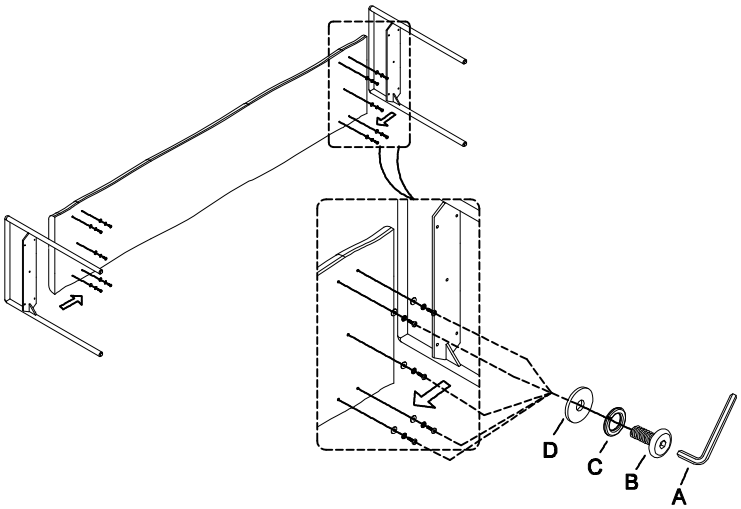

Step 2

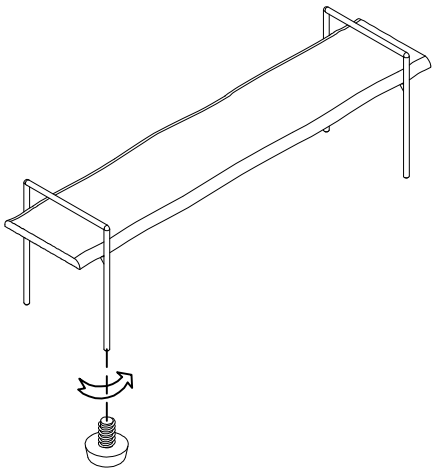

P.O. Box 558 | 3325 Grassy Hill Road | Rocky Mount, VA | 24151
www.uttermost.com