Assembly Instruction

DD-F02

Model No : KBF 210 BED

Thank you for purchasing this quality product.
Please check all packing material carefully which may have come loose inside the carton during shipment.

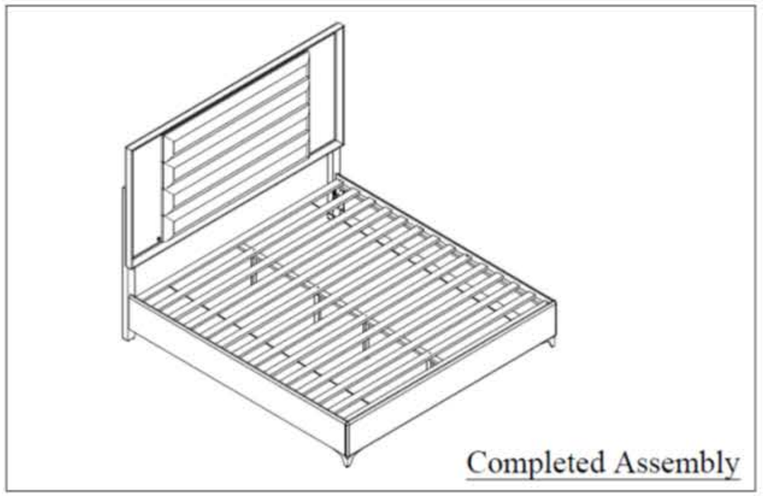

PART LIST

No	Description	Qty
1	Headboard	1pc
2	Footboard	1pc
3	Side Rail (R)	1pc
4	Side Rail (L)	1pc
5	Center Rail	1pc
6	Center Rail Supporter	4pcs
7	Bed Leg	2pcs
8	Bed Leg Supporter	2pcs
9	Slat	1set

HARDWARE LIST

No	Description	Qty
A	TRUSS HD C/B M4 x 25mm	8pcs
B	CSK Screw M4 x 30mm	8pcs

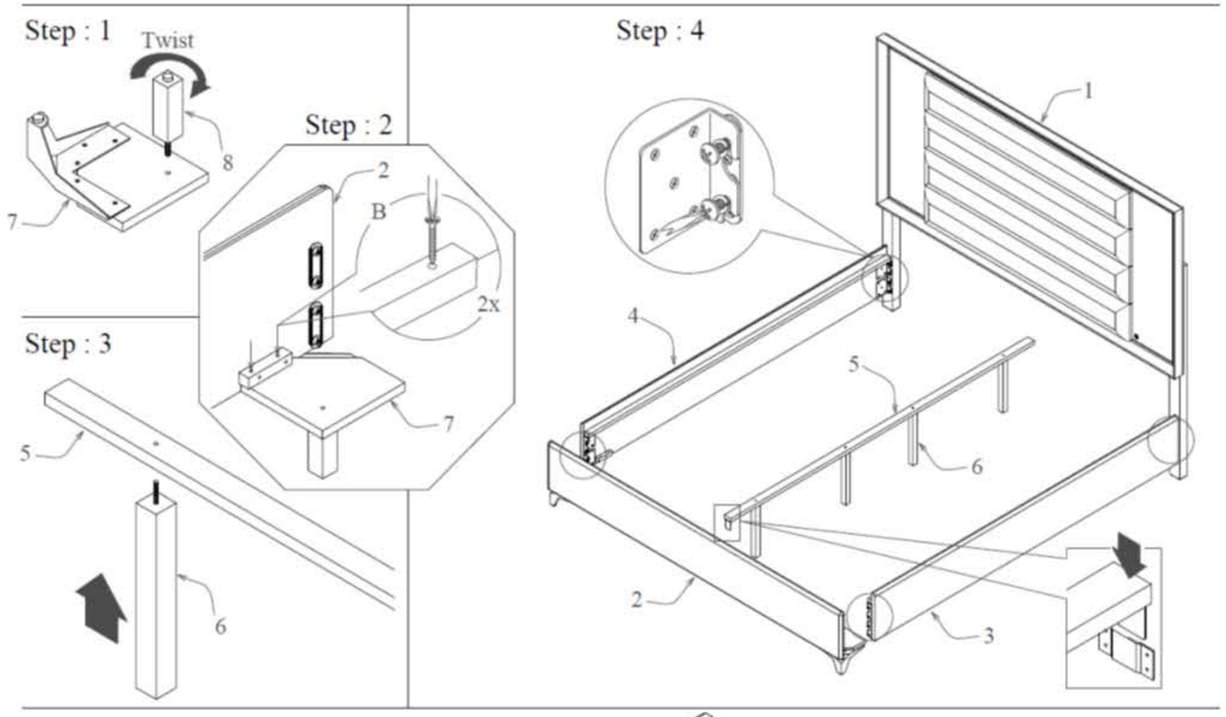

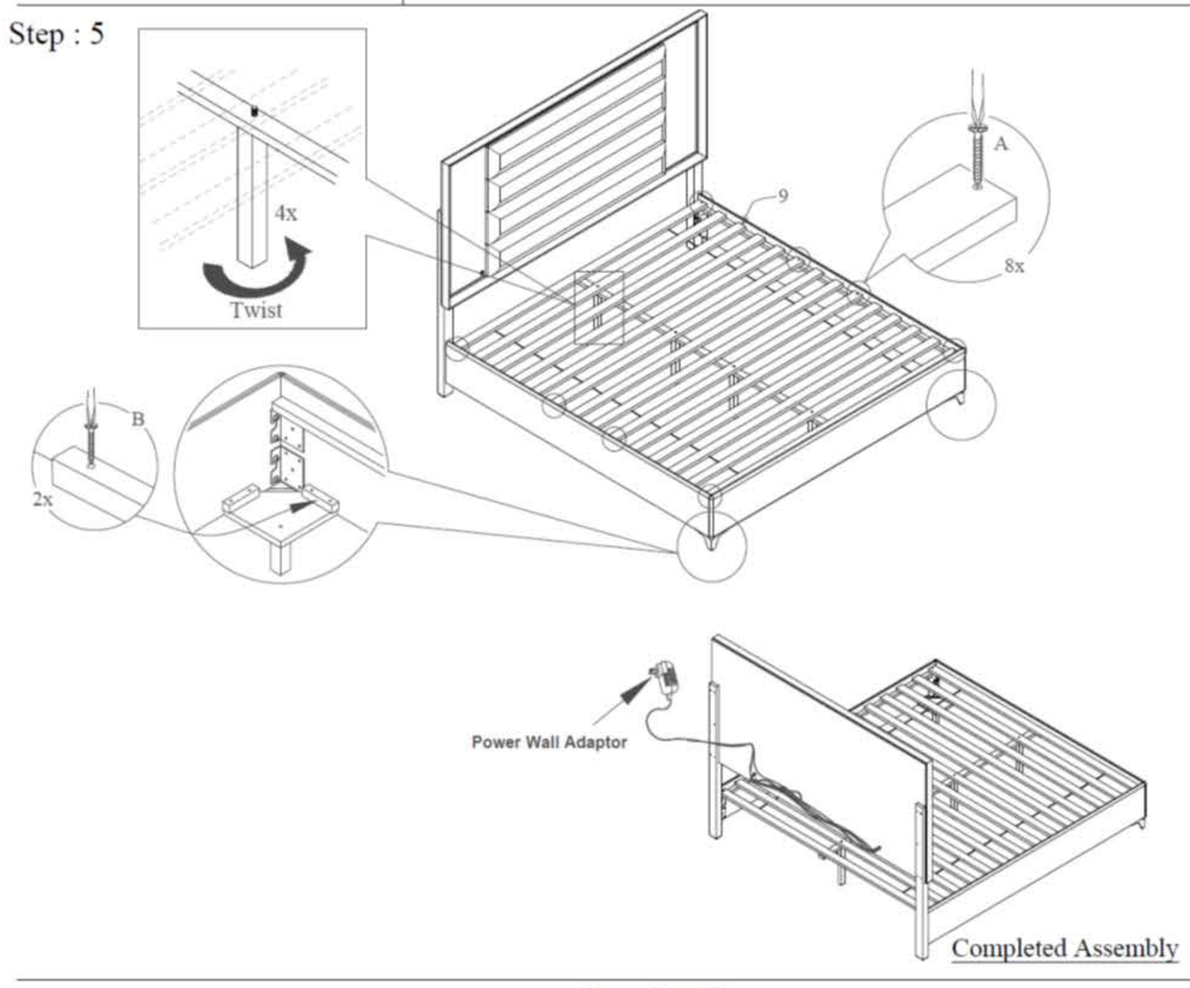

Assembly Instruction

DD-F02

Model No : KBF 210 HEADBOARD

Thank you for purchasing this quality product.
Please check all packing material carefully which may have come loose inside the carton during shipment.

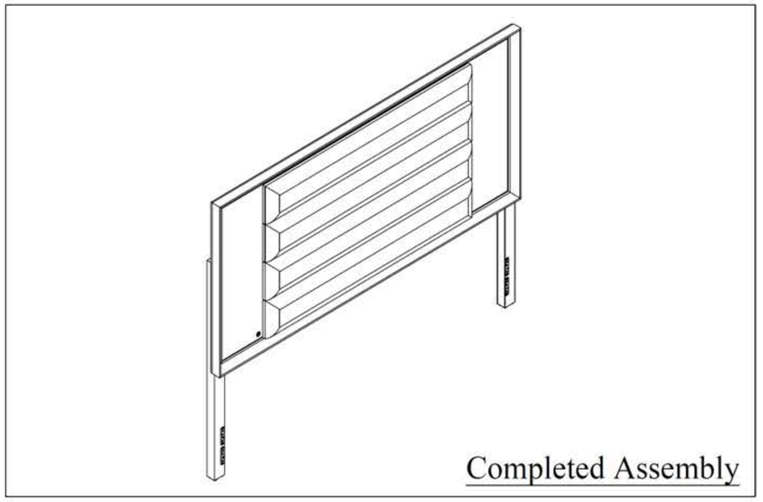

PART LIST

No	Description	Qty
1	Headboard	1pc
2	Headboard Left Support (L)	1pc
3	Headboard Right Support (R)	1pc

HARDWARE LIST

No	Description	Qty
A	JCBC Screw M6 x 35mm	10pcs

Step : 1

Refer label on headboard supporter to match label on back of headboard.

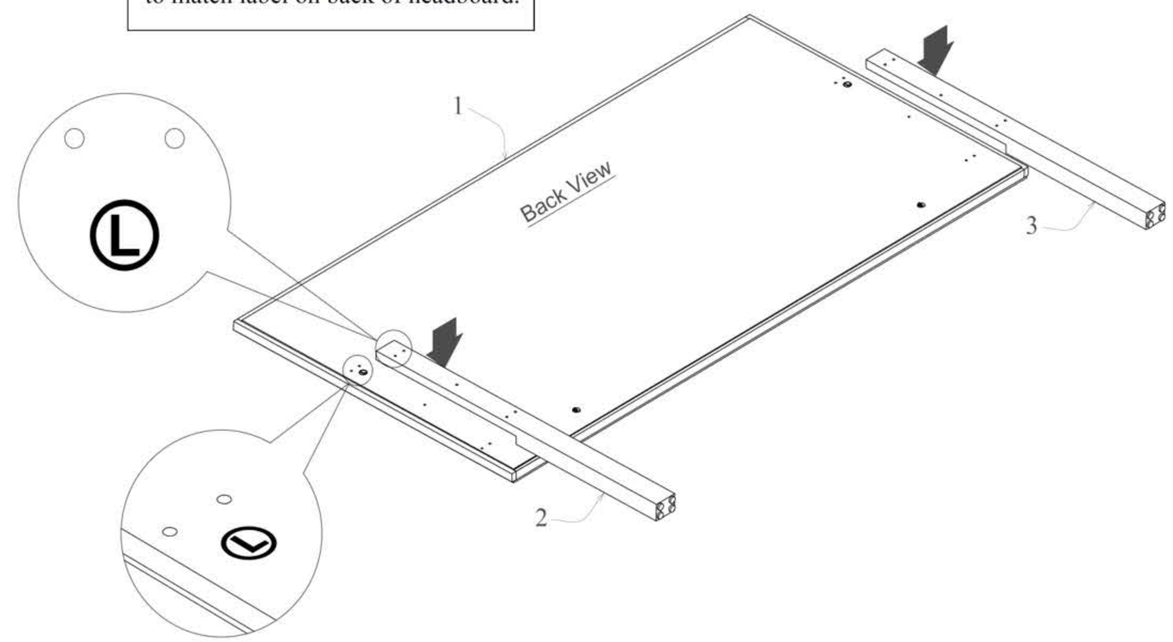

Step : 2

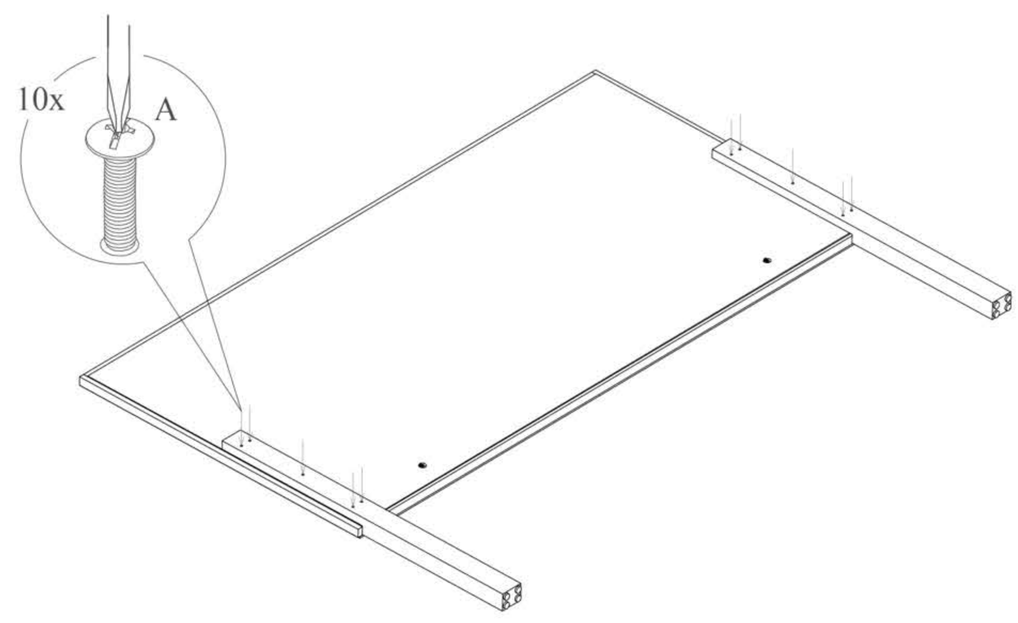

Assembly Instruction

Model No : KBF 210 VANITY DRESSER

Thank you for purchasing this quality product.
Please check all packing material carefully which may have come loose inside the carton during shipment.

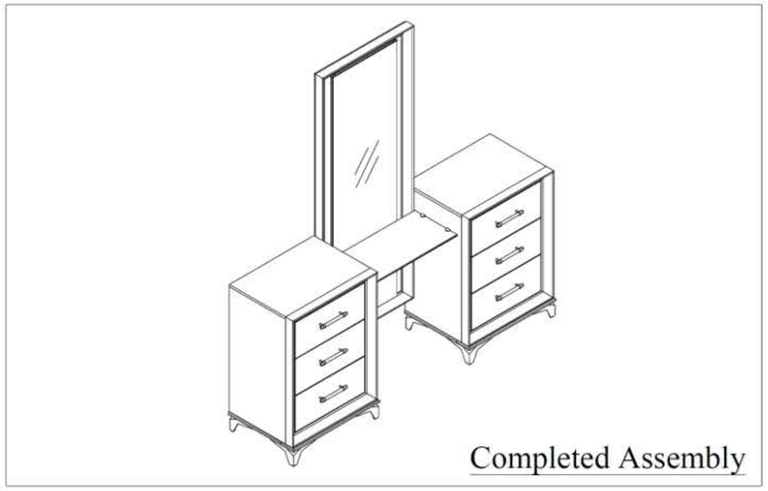

PART LIST

No	Description	Qty
1	Vanity Dresser (Left)	1pc
2	Vanity Dresser (Right)	1pc
3	Floor Mirror	1pc
4	Mirror Supporter	2pcs
5	Glass Shelf	1pc

HARDWARE LIST

No	Description	Qty
A	JCBC Screw M6 x 30mm	8pcs
B	JCBC Screw M6 x 35mm	4pcs
C	Washer	12pcs
D	Glass Shelf Clamp	4pcs
E	CSK Screw M3.5 x 16mm	8pcs

Step : 1

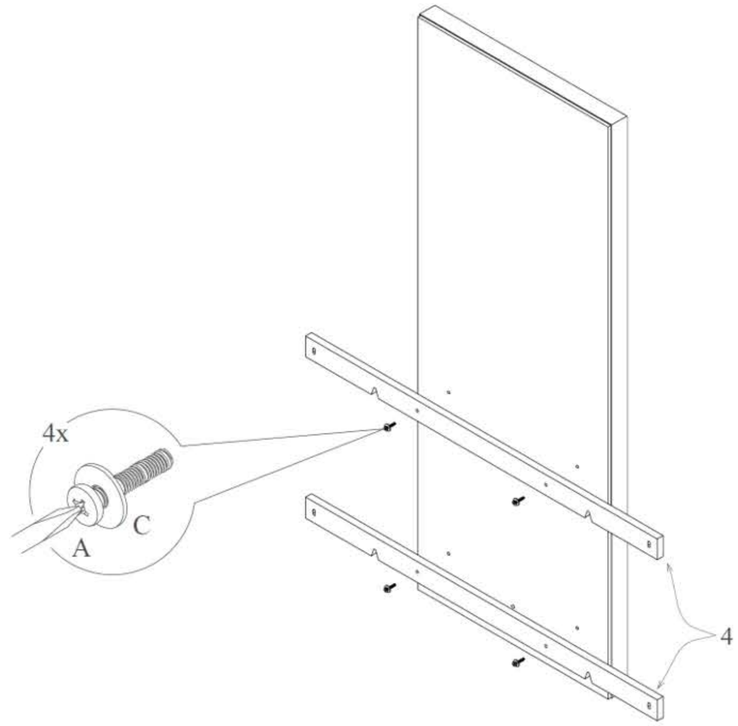

Step : 2

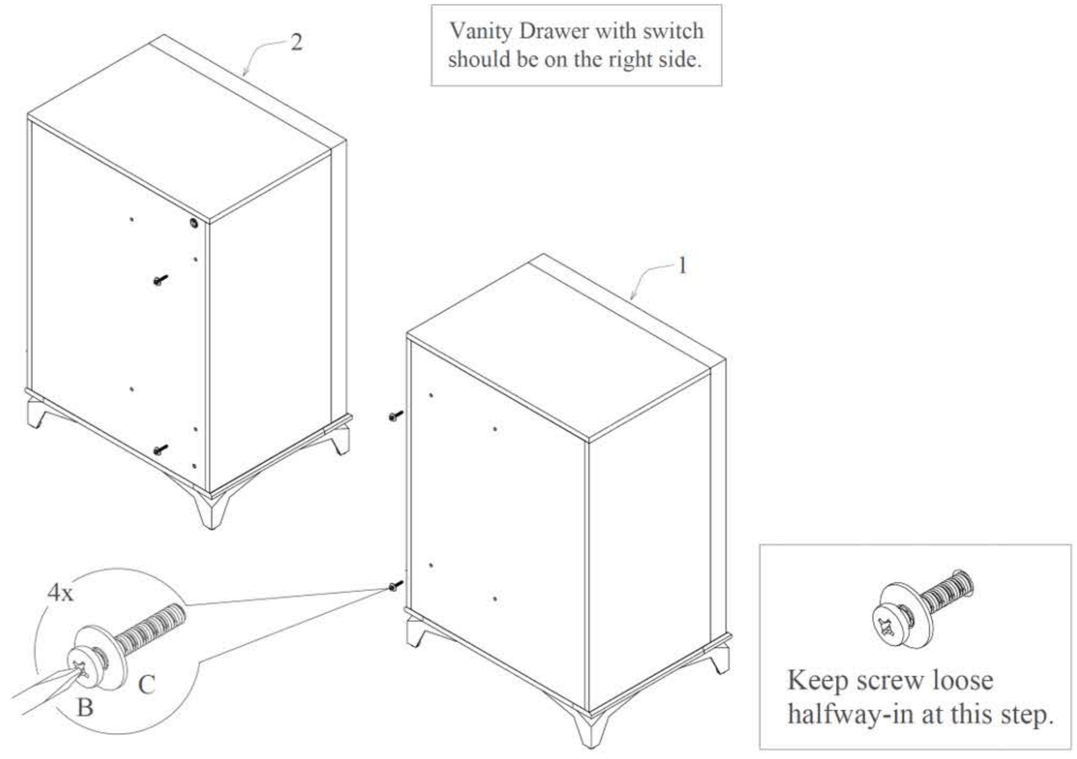

Step : 3

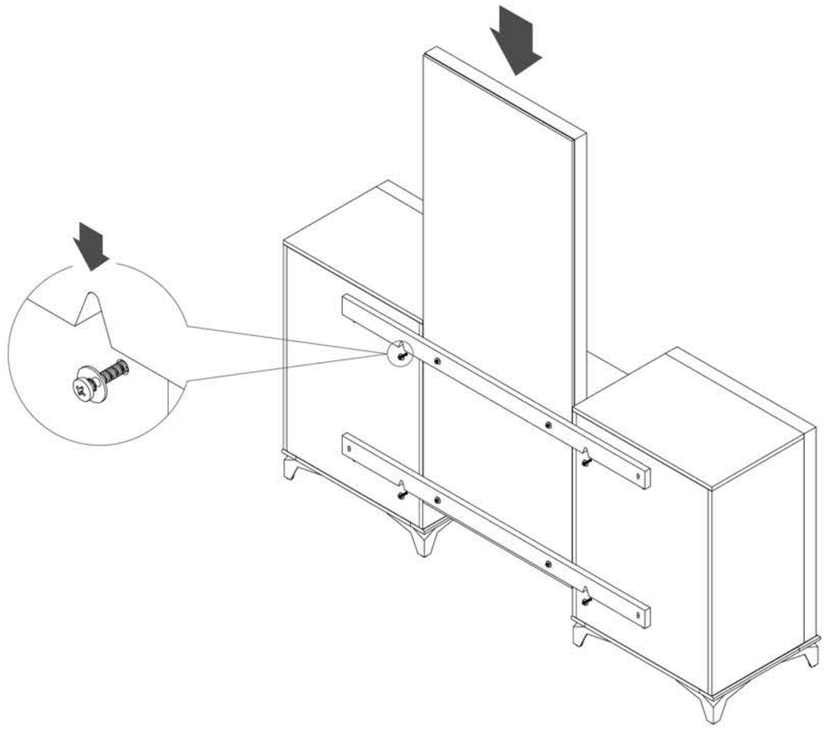

Step : 4

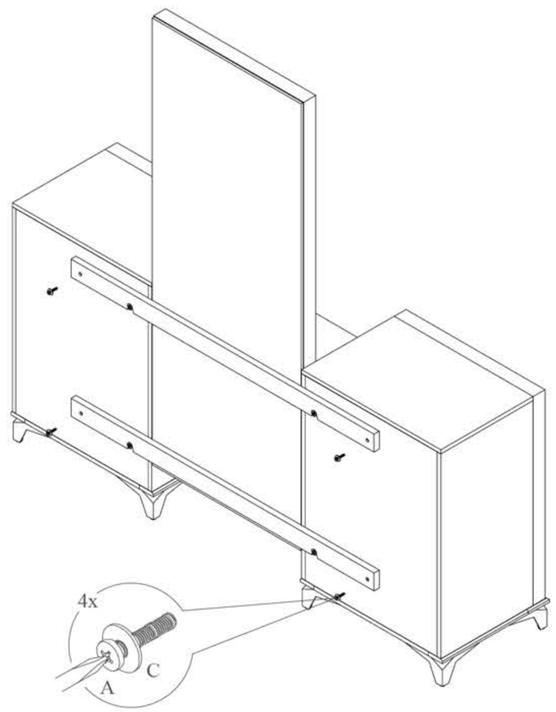

Step : 5

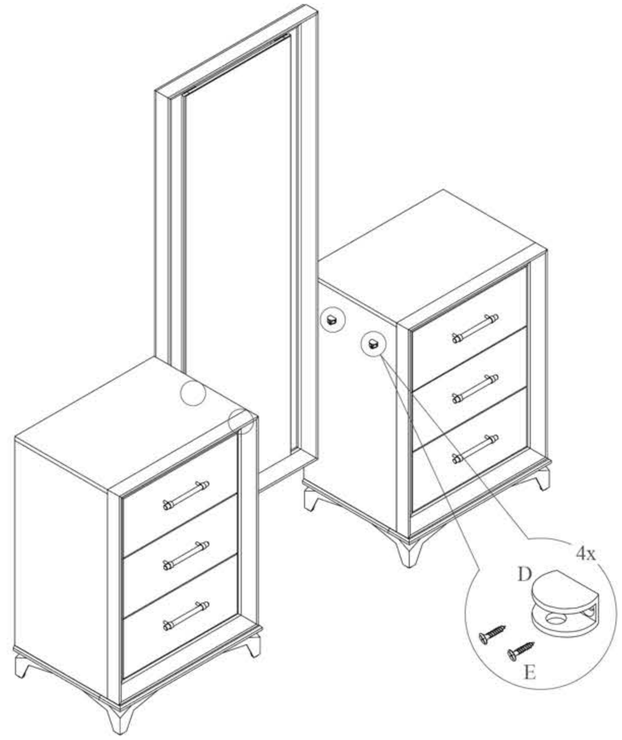

Step : 6

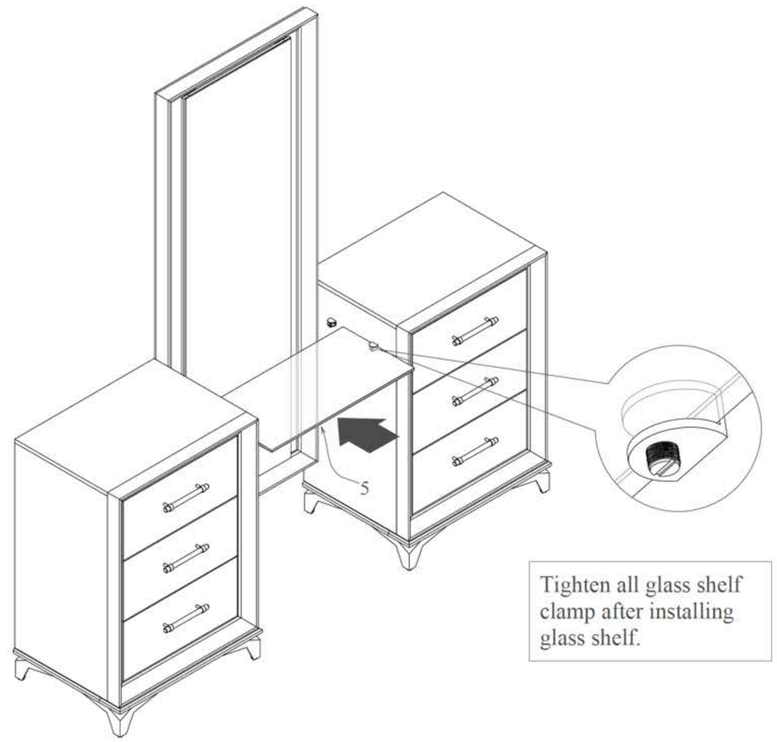

Assembly Instruction

DD-F02

Model No : KBF 210 CHEST OF DRAWERS
Thank you for purchasing this quality product.
Please check all packing material carefully which may have come loose inside the carton during shipment.

Completed Assembly

PART LIST

No	Description	Qty
1	Casegoods	1pc
2	Legs	4pcs

HARDWARE LIST

No	Description	Qty
A	CSK Screw M3.5 x 20mm	24pcs

Place the Chest of Drawers lying down position to ease the assembly process.

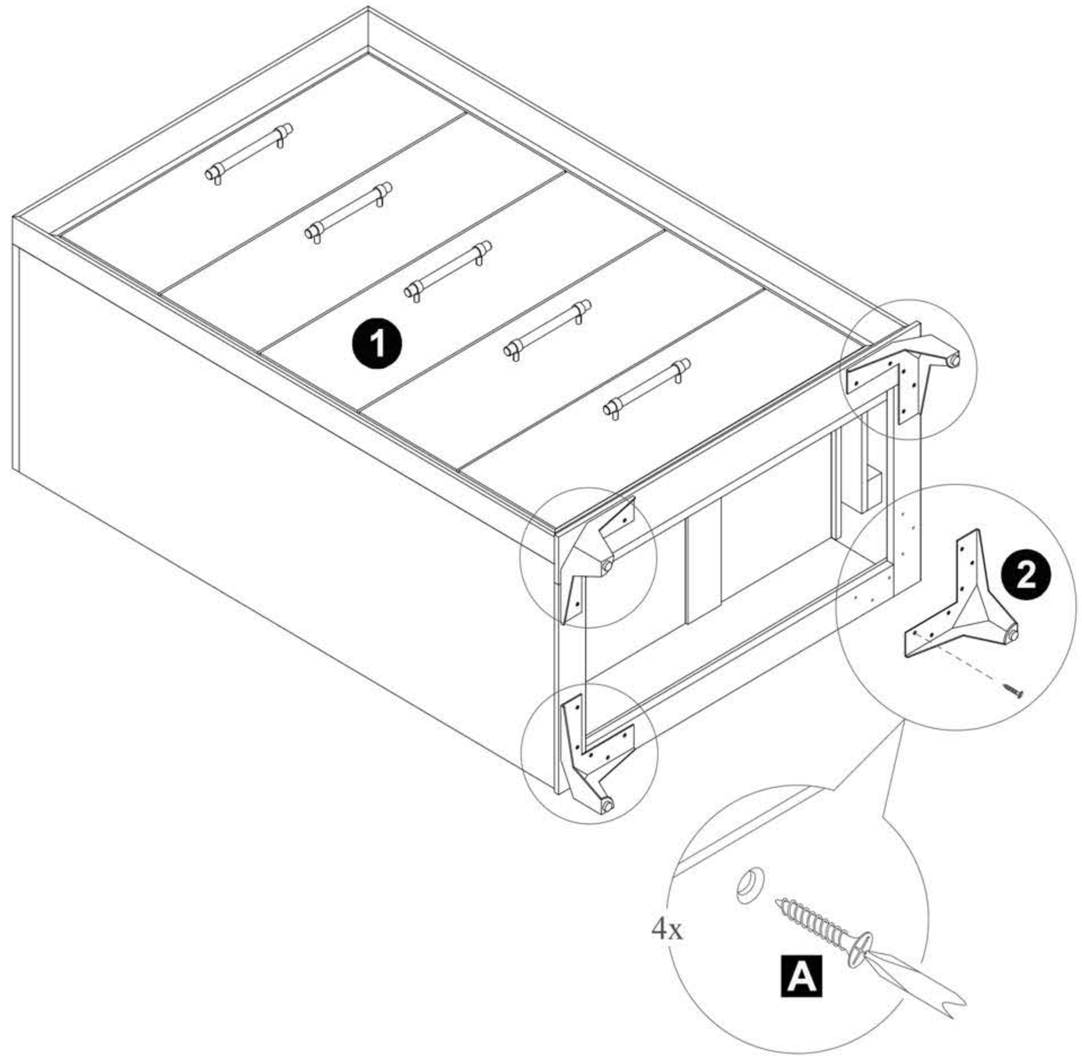

Assembly Instruction

DD-F02

Model No : KBF 210 DRESSER

Thank you for purchasing this quality product.
Please check all packing material carefully which may have come loose inside the carton during shipment.

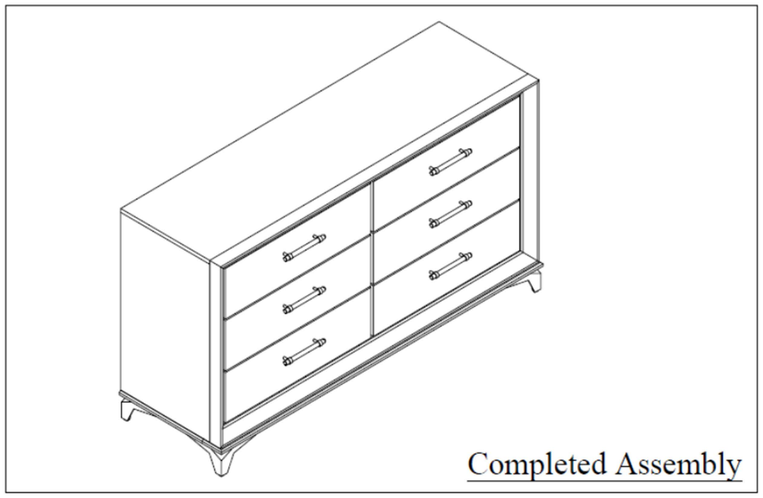

Completed Assembly

PART LIST

No	Description	Qty
1	Casegoods	1pc
2	Legs	4pcs

HARDWARE LIST

No	Description	Qty
A	CSK Screw M3.5 x 20mm	24pcs

Place the Dresser lying down position to ease the assembly process.

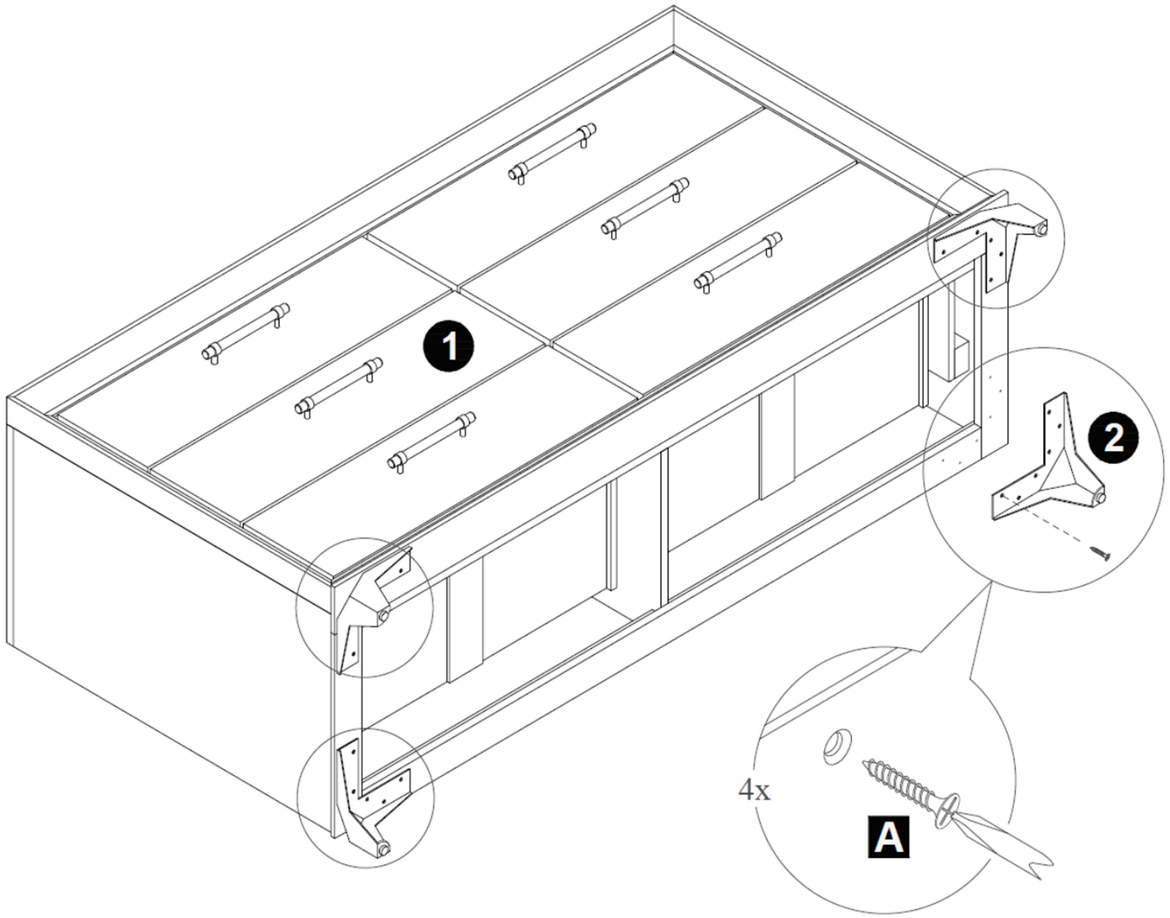

Assembly Instruction

DD-F02

Model No : KBF 210 NIGHT STAND

Thank you for purchasing this quality product.
Please check all packing material carefully which may have come loose inside the carton during shipment.

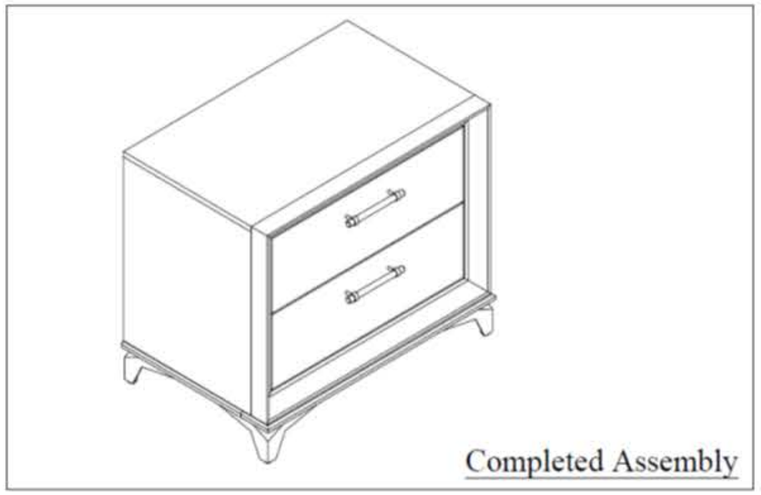

Completed Assembly

PART LIST

No	Description	Qty
1	Casegoods	1pc
2	Legs	4pcs

HARDWARE LIST

No	Description	Qty
A	CSK Screw M3.5 x 20mm	24pcs
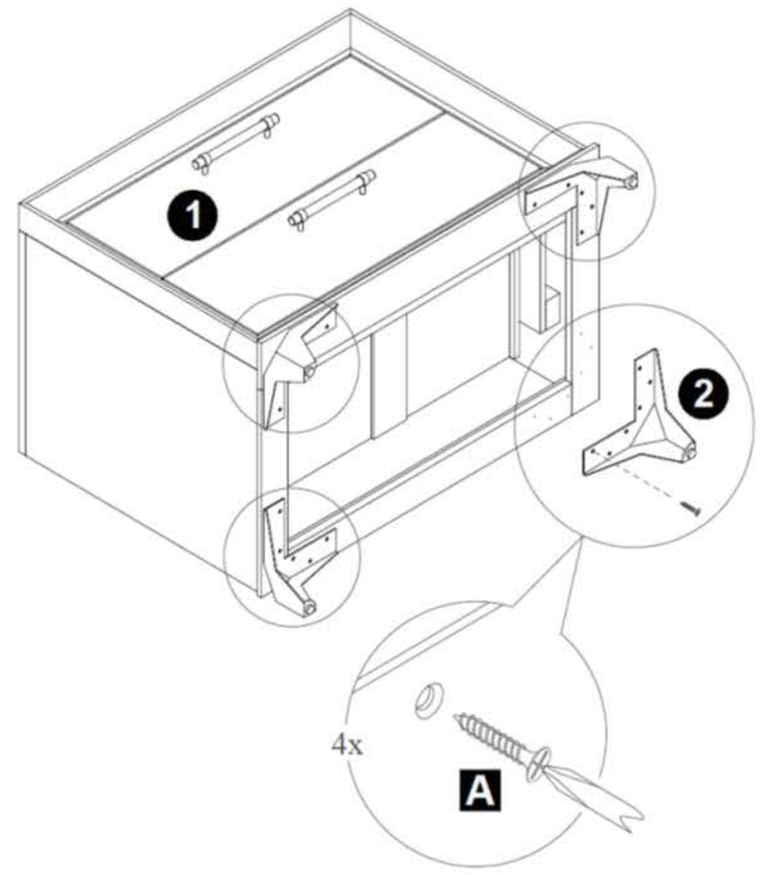
Place the Night Stand lying down position to ease the assembly process.