DETAILED DIMENSIONS

8610-BS Stewart Night Stand (One Drawer)

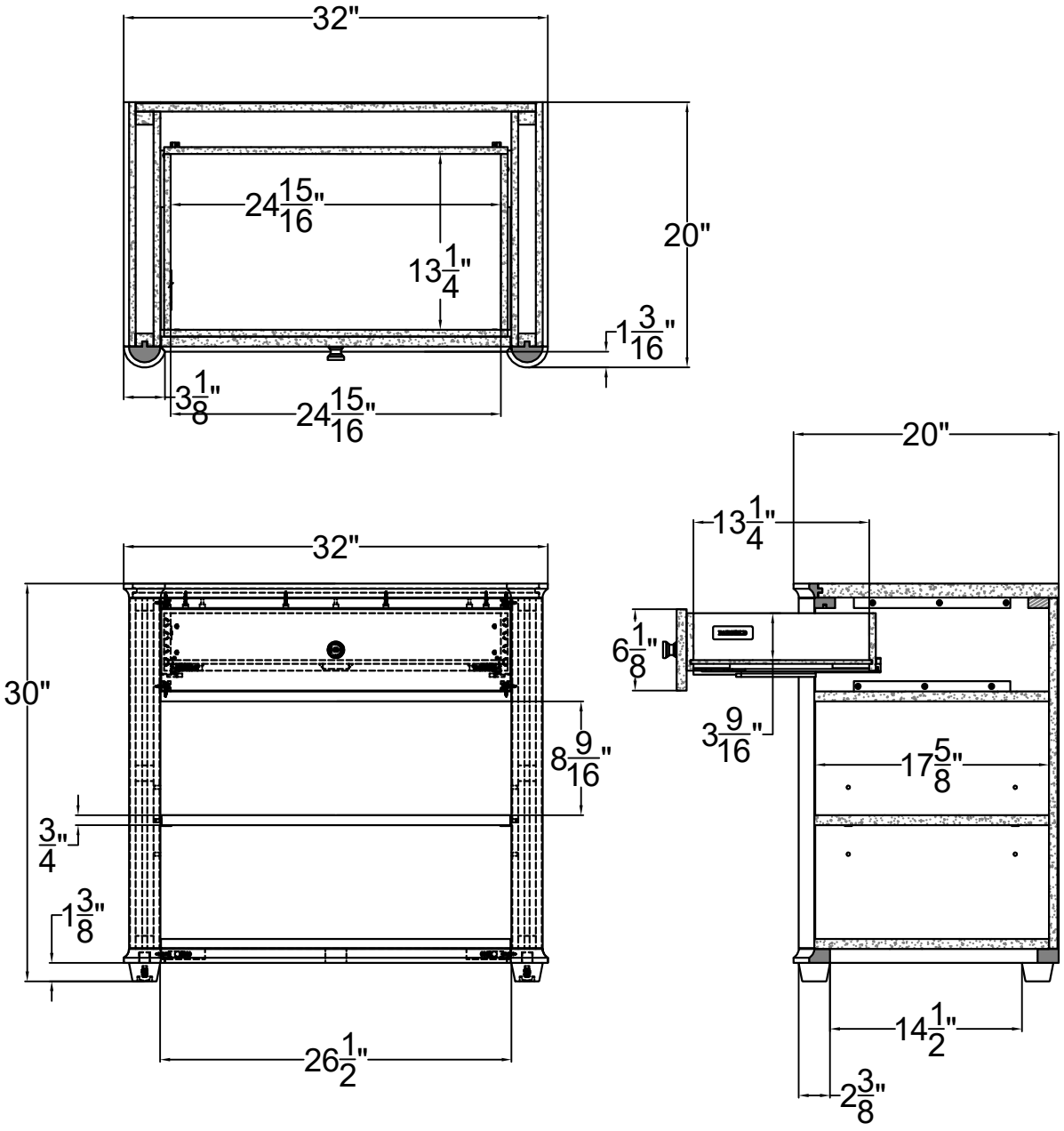

Due to the handcraed nature of our product, variations to plus or minus 1" of our listed measurements could occur. Specifications are subject to change without notice.