DETAILED DIMENSIONS

8010-88 MATTEO DRINK TABLE

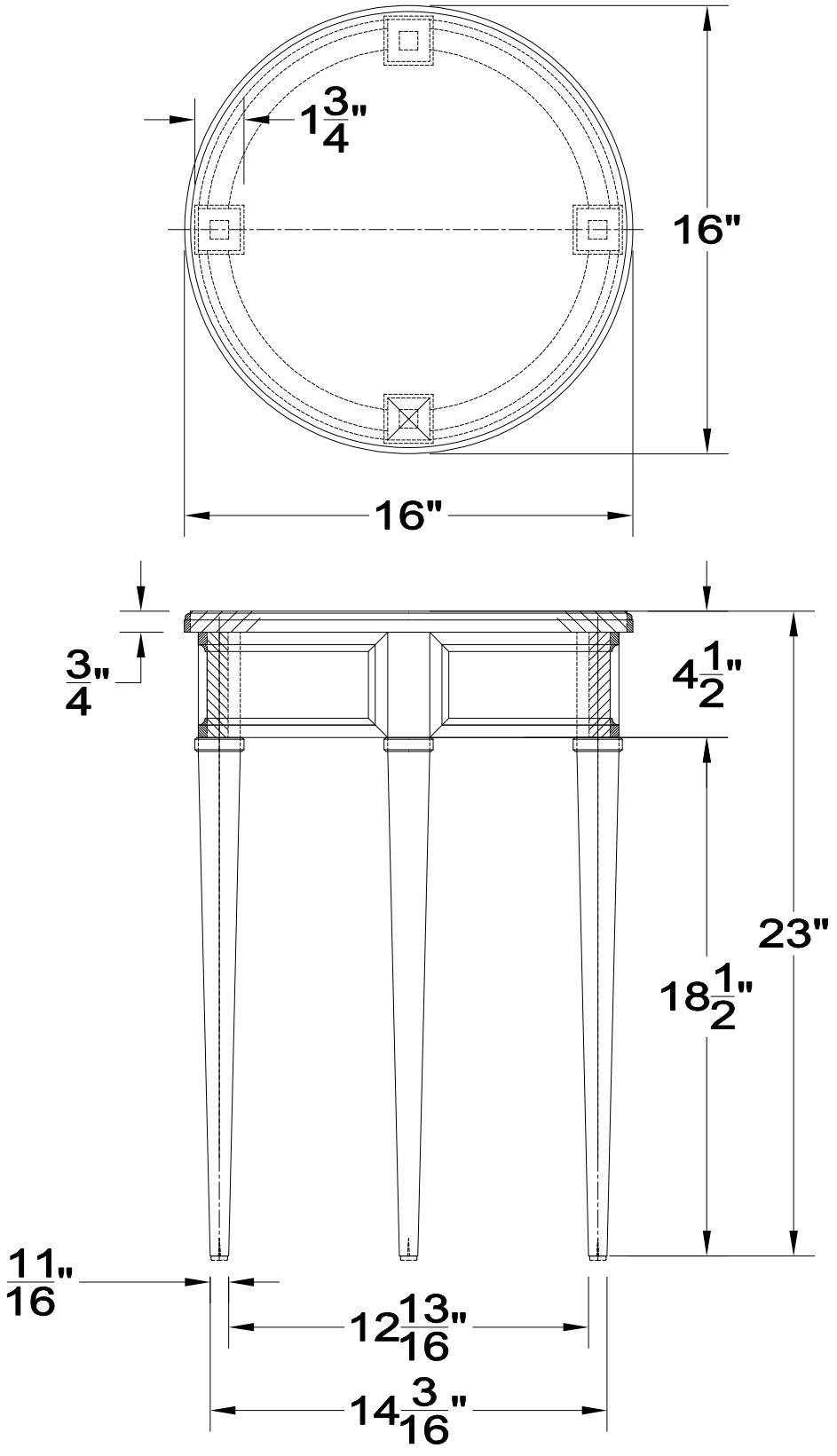

Due to the handcraed nature of our product, variations to plus or minus 1" of our listed measurements could occur. Specifications are subject to change without notice.