K2289-65
JULIE-5PC DING GRY TT/BLK STLS

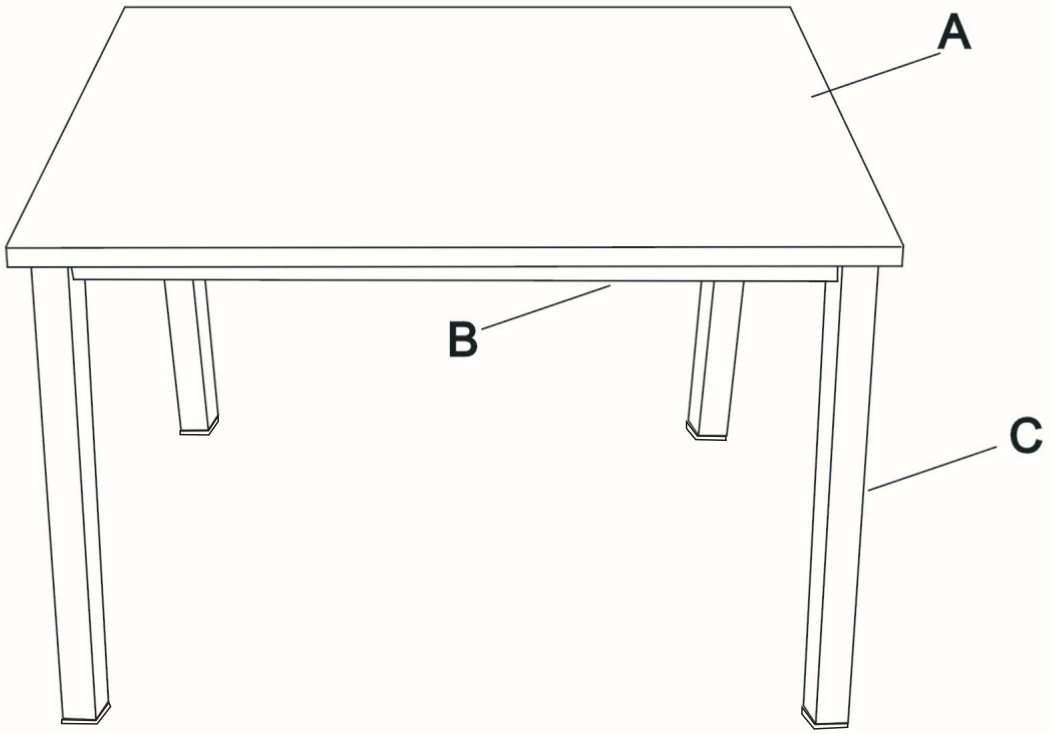

K2289-65	A		1
	B	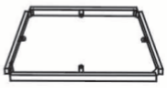	1
	C		4
	D	 (50*50MM)	4

1

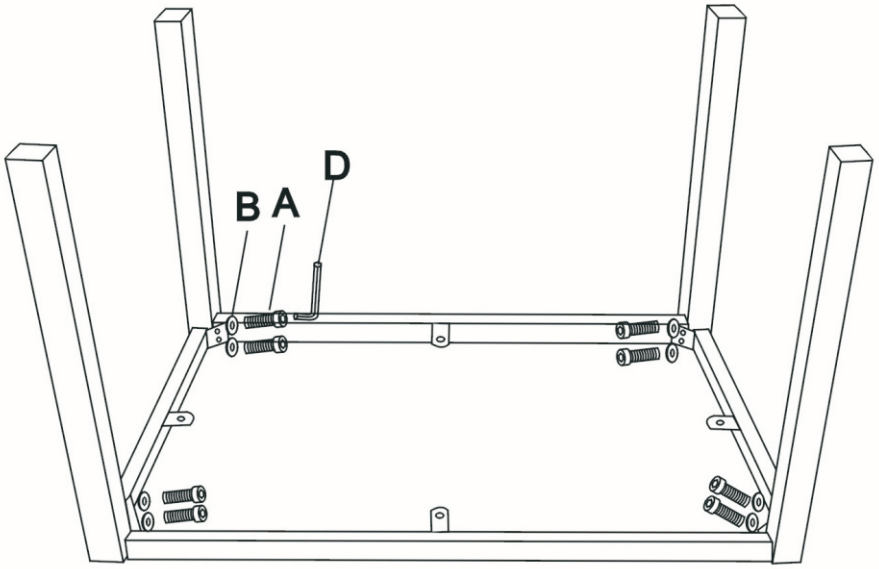

2

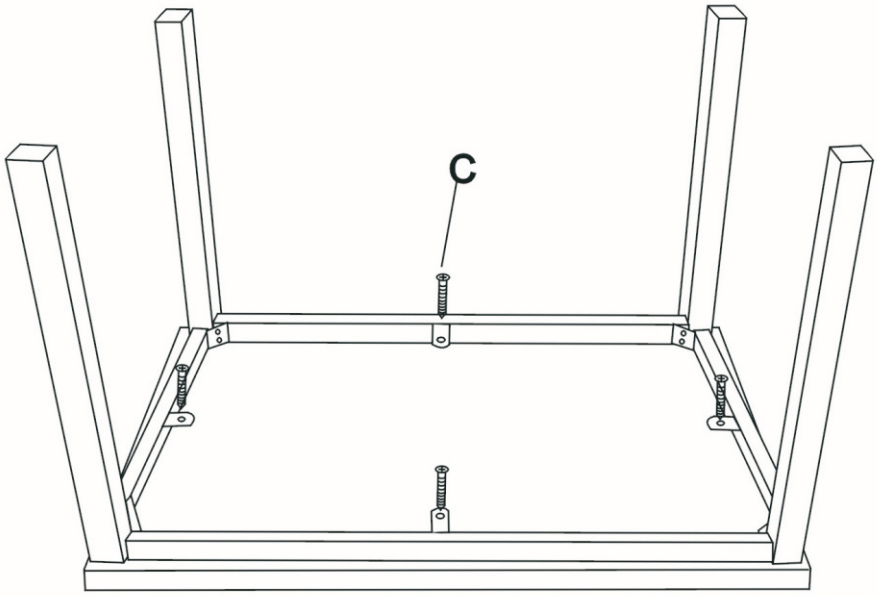

A	8X		8*35mm
B	8X		8*16mm
C	4X	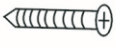	4*16mm
D	1X		

K2289-65
JULIE-5PC DING GRY TT/BLK STLS

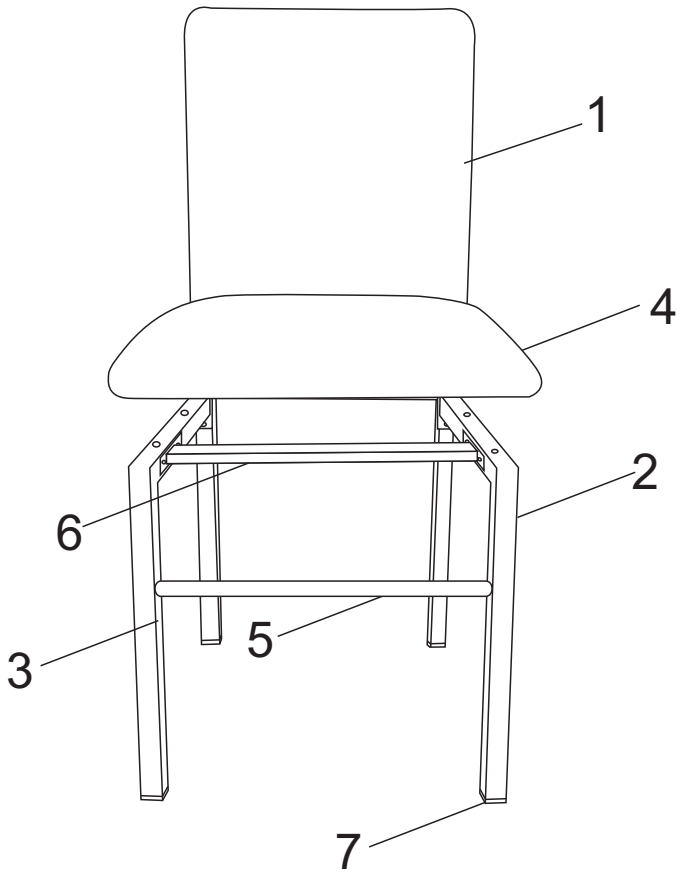

K2289-65	1	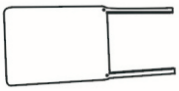	1PC
	2		1PC
	3		1PC
	4		1PC
	5	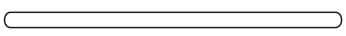	1PC
	6	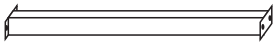	1PC
	7	 (25*25MM)	4PCS

1

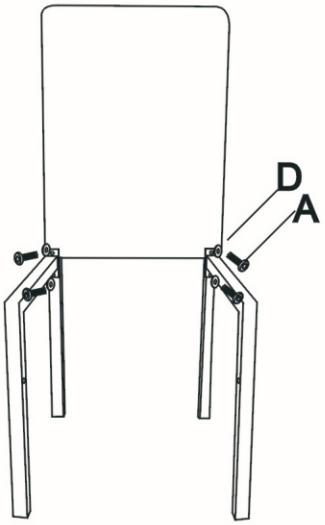

2

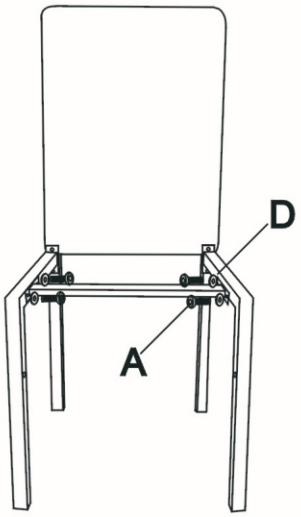

3

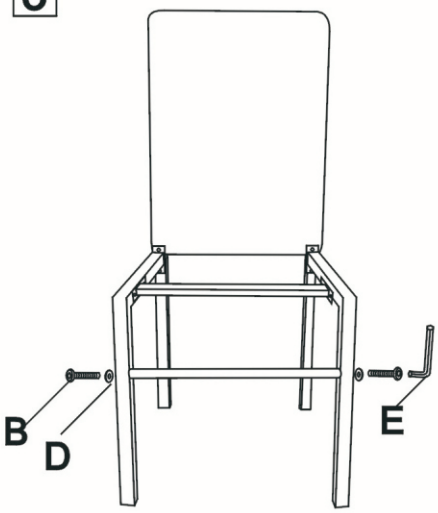

4

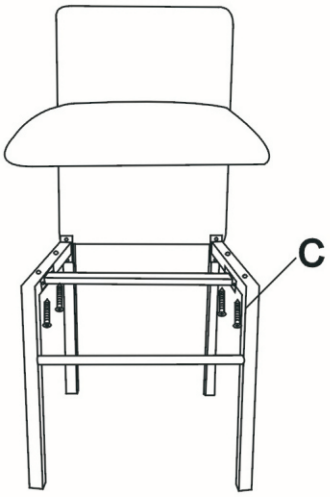

A	8X		6*20mm
B	2X	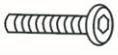	6*35mm
C	4X		4*40mm
D	10X		6*16mm
E	1X		