PUCCM630SS

30" UNDER CABINET HOOD

YALE APPLIANCE

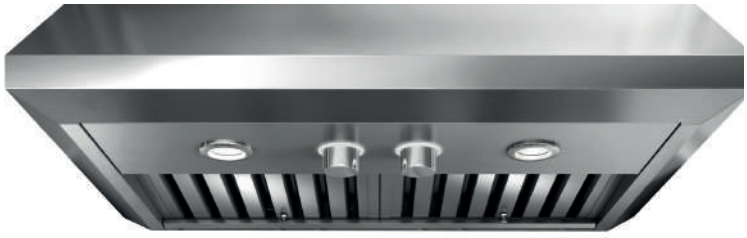

FEATURES & BENEFITS

- QUIET SYSTEM - Specialized technology that allows reducing sound levels of your hood, which can effectively decrease noise by more than 35%.
- Grease Collecting Baffle Filters - Intended for high airflow cooking, Their "S" shape design and Stainless Steel finish is crafted to capture significant amounts of grease.
- Thermal barrier - The system detects extreme temperatures above 158 degrees and automatically increases the blower speed to HIGH.
- AIR FLOW CONTROL - AFC technology enables the user to reduce the maximum blower CFM achieving <300 CFMs,to meet local code requirements.
- Fine precision - Constructed with great attention to detail with High-quality stainless steel, result in a seamless and flawless finish.
- Superior performance - High performance ventilation with blowers ranging from 600 to 1200 CFM.



GENERAL FEATURES

Standard Operating Mode	Ducted or Recirculating with Kit
Recirculating	Yes, Optional, *Accessories needed
Maximum CFM (Blower)	600 CFM
CFM Reduction Kit	Included
Sones	1.7 - 7.0 Sones
Number of Speed Settings	4 Speeds
Motor Location	Integrated Motor in Hood Body
Number of Lights	2 LED Lights
Light Lumens	540 Lumens
Light Color	3000 Kelvin
Total Power of the Lamps	6.5 Watts
Damper Included	Yes
Grease Filter Material	Stainless Steel
Grease Filter Type	(2) Grease Collecting Stainless Steel Baffle

TECHNICAL DETAILS

Watts	457W
Current	20A
Volts	120V
Frequency	60HZ
Plug Type	Junction box

WEIGHTS & DIMENSIONS

Overall Dimensions (HxWxD)	30"W x 23"D x 11 1/32" H
Minimum Mounting Height Above Gas / Electric Cooking Surface	30" Gas 24" Electric
Diameter of Air Duct Top	3 1/4" x10"
Diameter of Air Duct Rear	3 1/4" x10"

OPTIONAL ACCESSORIES

Duct Cover Kit 6"(No grates)	#ACC02159
Duct Cover Kit 6"(With grates)	#ACC0207173 (Requires #ACC02770 Recirculation Filters)
Duct Cover Kit 12"(No grates)	#ACC02160
Stainless Steel Backsplash	#ACC0142864
Inline Blower Shell Kit	#ACC0211227 (6" duct size compatible, only for 600 CFM models)
Inline Blower 1200 CFM Kit	#ACC0154387
External Blower 1200 CFM Kit	#ACC0153054

RECIRCULATING ACCESORIES REQUIRED

Recirculating Kit	#ACC02770 (Contains 2 round carbon filters & cabinet grate)

WARRANTY

Limited Warranty Parts & Labor	Five (5) years parts & in-home labor

ADA COMPLIANT c UL UL AHAM VERIFIDE

PUCCM630SS
30" UNDER CABINET HOOD

YALE APPLIANCE

HOOD DIMENSIONS

SIDE VIEW

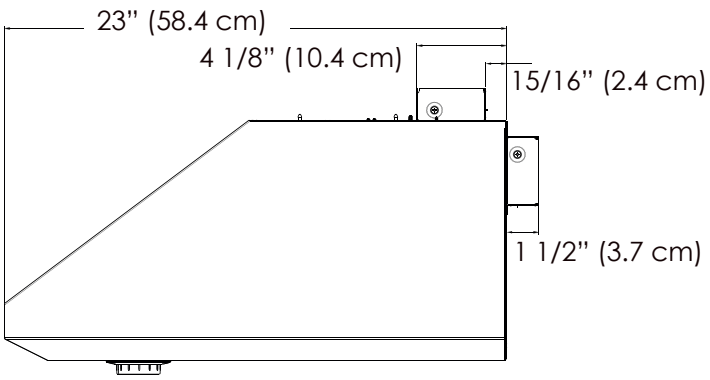

FRONT VIEW

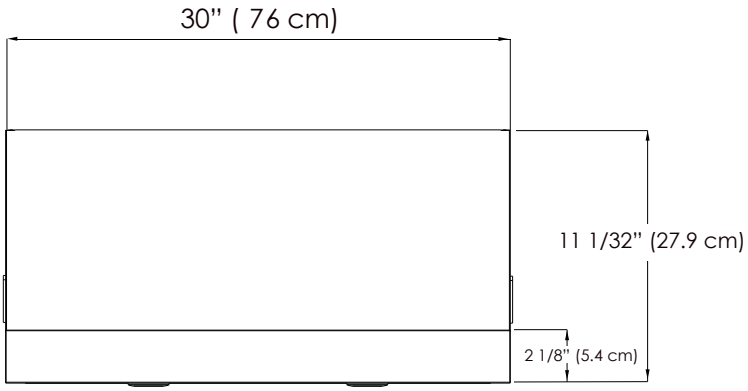

TOP VIEW

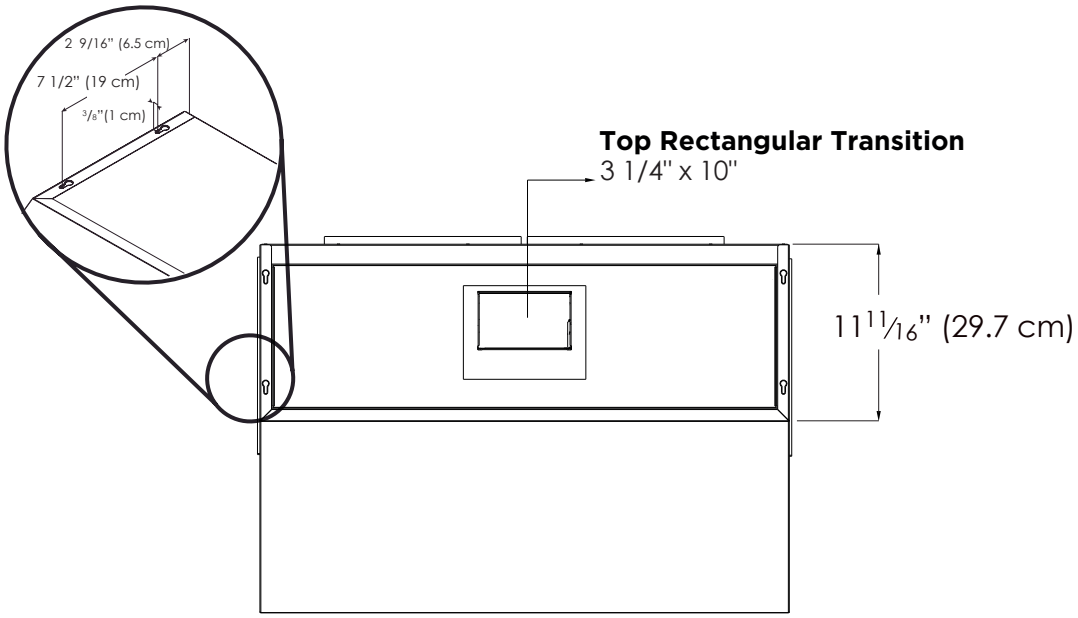

Specifications are for planning purposes only. Refer to installation instructions and consult with a heating and ventilation engineer for your specific ventilation requirements. For the most detailed information, refer to installation instructions accompanying product. Specifications are correct at time of printing. Yale Appliance reserves the right to change product specifications or design without notice.