AERE SIDE CHAIR
ASSEMBLY INSTRUCTIONS

MODUS FURNITURE

PARTS PACKING CONFIGURATIONS

A. BACK 1 PC

B. LEG 1 PC

C. SEAT CUSHION 1 PC

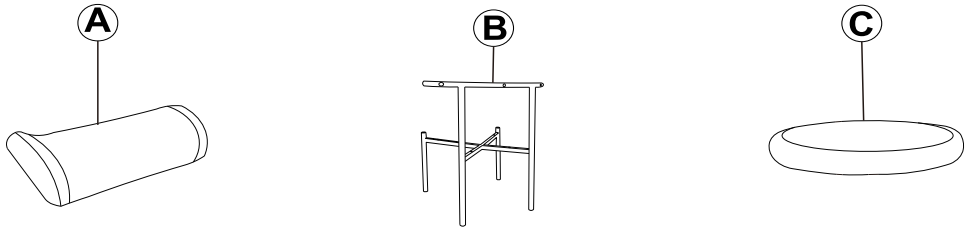

HARDWARE KIT PACKED IN BOX(FOR 2 CHAIRS)

NO.	DESCRIPTION	IMAGE	Q' TY
1	WASHER(ø13x1.2mm)		4PCS
2	SPRING WASHER(ø10x1.5mm)		4PCS
3	BOLT(M6*40mm)		7PCS
4	ALLEN KEY(S4)		1 PC

FULLY ASSEMBLED

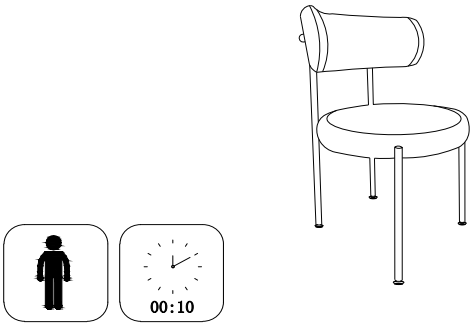

STEP 1: FASTEN THE MIDDLE SCREW TIGHTLY

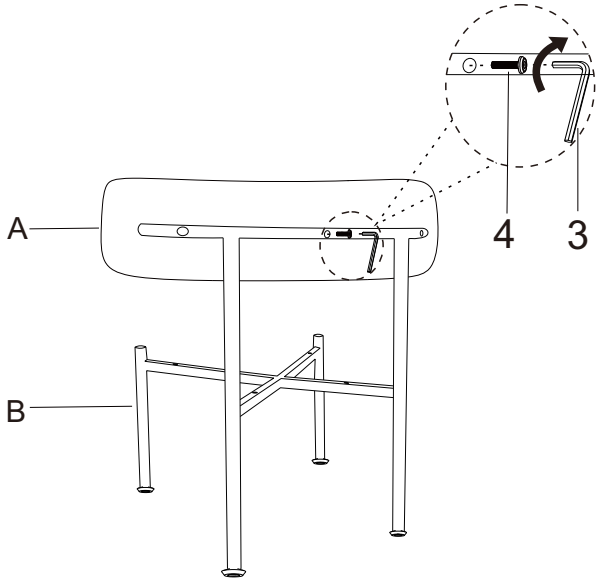

STEP 2: THEN THE SIDE SCREW

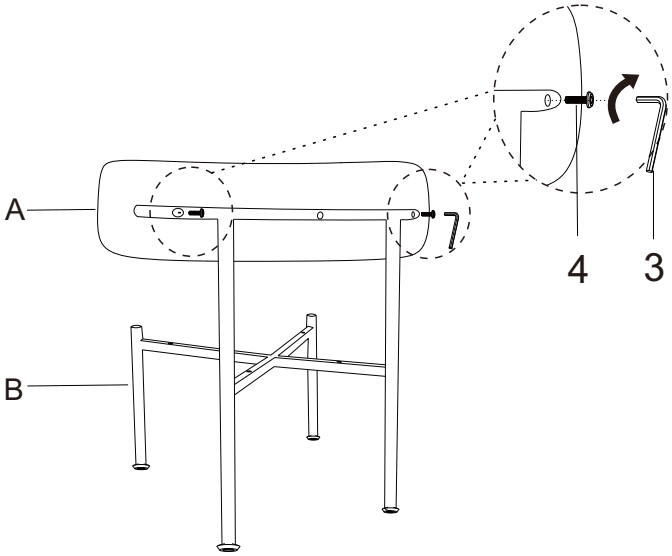

STEP 3:

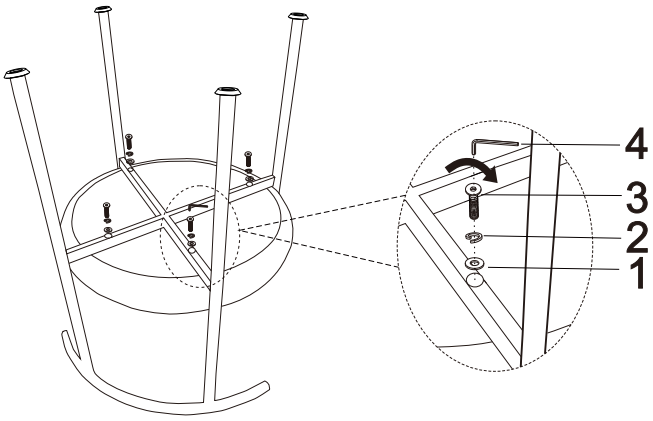

TIGHTEN ALL THE BOLTS COMPLETELY

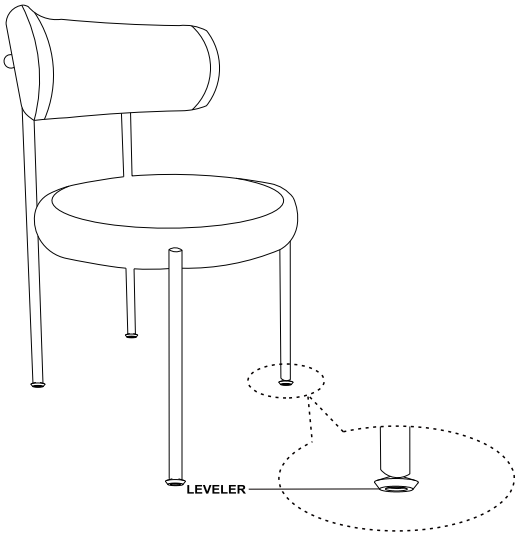

FULLY ASSEMBLED