1/20/10

LYNX FREESTANDING 42″ W/ DIMENSIONS

TOP VIEW

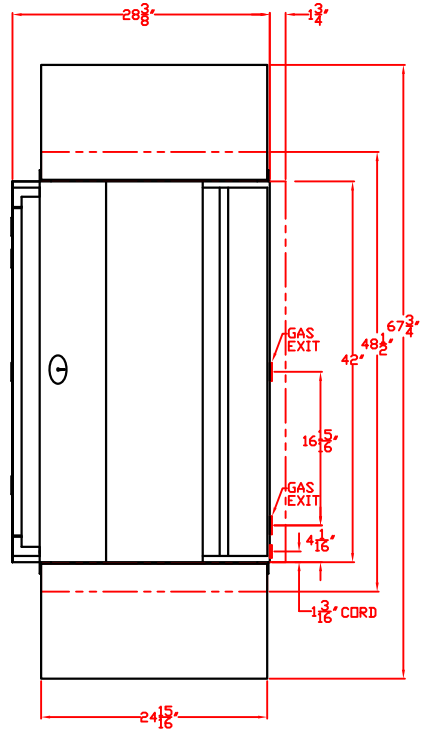

FRONT VIEW

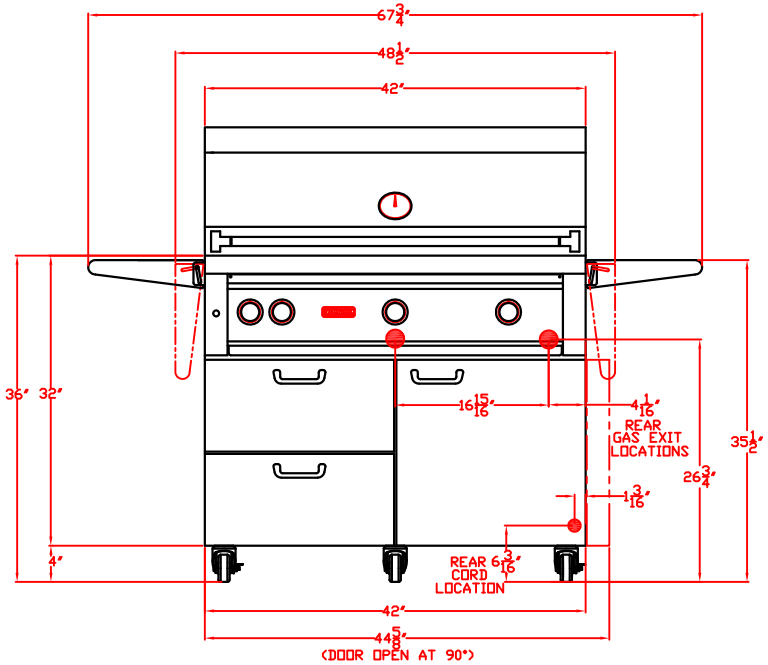
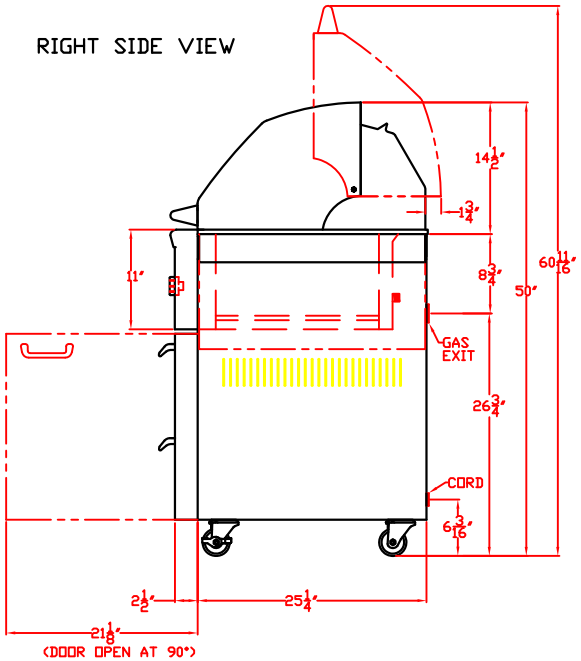
RIGHT SIDE VIEW