PRCG15P0AP

Presrv™ Panel Ready Gourmet Clear Ice Machine

ZEPHYR

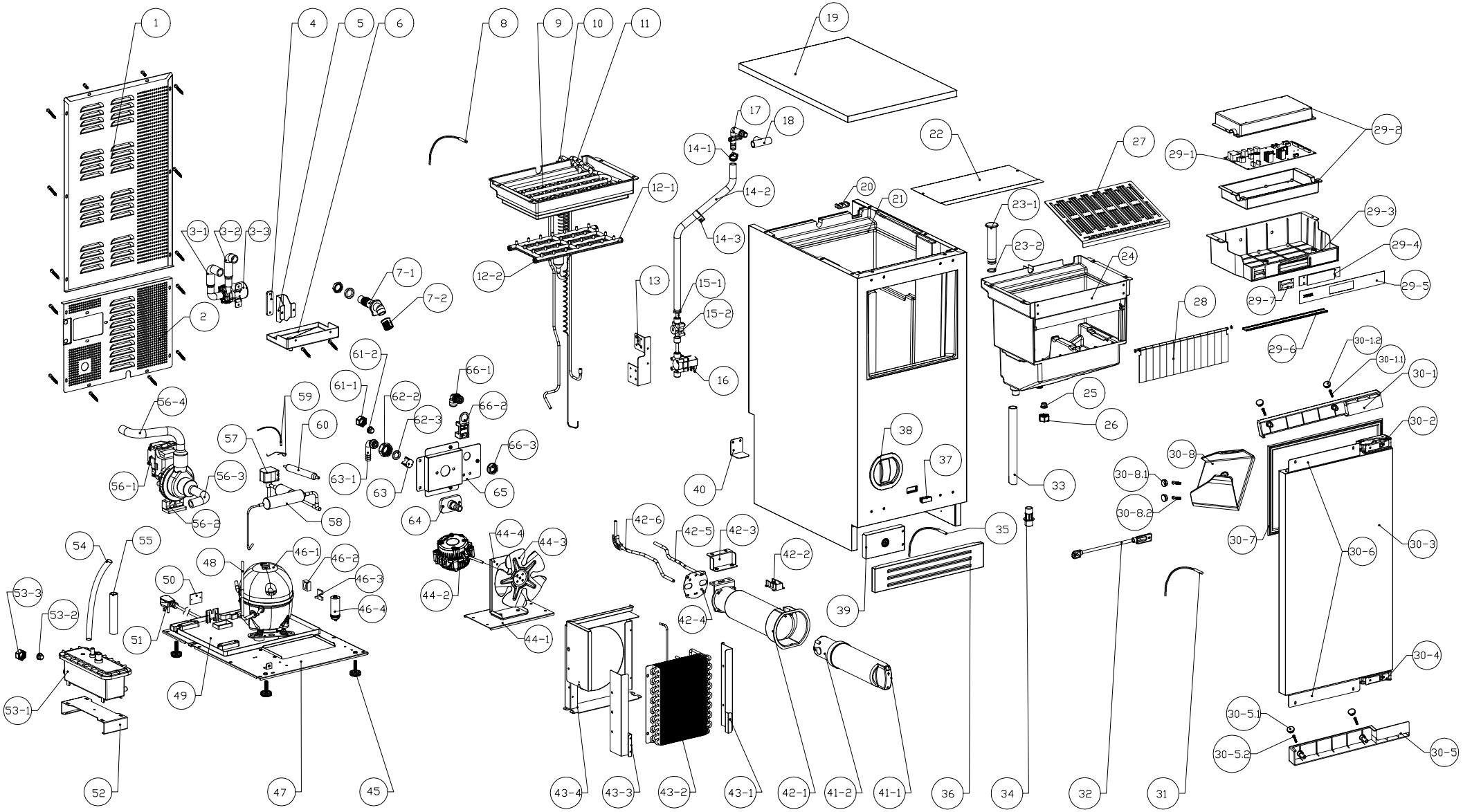

PRCG15P0AP

Accessory List

ZEPHYR

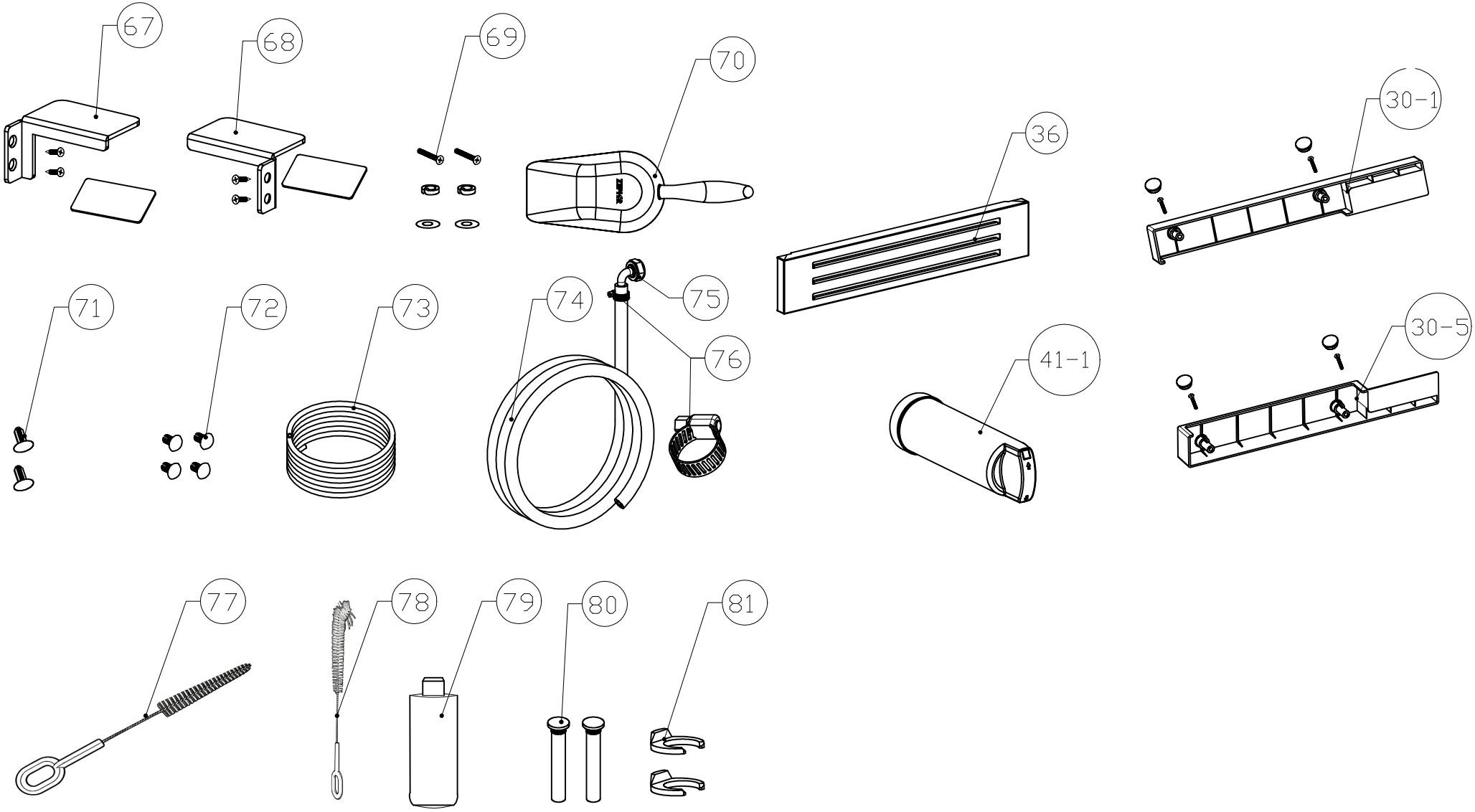

ZEPHYR

Presrv™

PRCG15P0AP

Ref #	Part #	Description	Qty.
1	50120299	Rear Cover Panel, Upper	1
2	50120300	Rear Cover Panel, Lower	1
3-1	50330052	Circulation Pump Water Outlet Pipe	1
3-1.1	54150033	Hose Clamp	2
3-2	50330053	Circulation Pump Inlet Hose	1
3-2.1	54150034	Hose Clamp	2
3-3	12180001	Circulation Pump	1
4	54060016	Rubber Damper	1
5	54140414	Circulation Pump Bracket	1
6	56130062	Water Reservoir	1
7-1	50330054	Water Inlet Pipe	1
7-2	56300010	Filter Screen	1
8	11050044	Ice Cube Tray Sensor	1
9	54240038	Evaporator Assembly	1
10	50330055	Suction Pipe	1
11	56060006	Reversing Valve Connecting Tube	1
12-1	56150019	Water Sprayer w/ Connecting Pipe	1
12-2	56140028	Water Sprayer Rubber Plug	4
13	54140415	Flow Meter Bracket	1
14-1	54150033	Hose Clamp	2
14-2	50330056	Evaporator Inlet Pipe	1
14-3	54150036	Fixing Clamp	1
15-1	12060012	Flow Meter Connector	1
15-1.1	54150039	Blue Clamp	2
15-2	11050050	Flow Meter	1
16	56060007	Water Inlet Solenoid Assembly	1
17	12060008	Water Supply Connector to Evaporator	1
18	12060009	Water Inlet Tee Connector	1
19	50140252	Top Panel Assembly	1

20	56220065	Evaporator Pipe Rubber Gasket	2
22	56210131	Electrical Box Cover Plate	1
23-1	56150020	Overflow Tube	1
23-2	56220066	Silicone Gasket	1
24	54140416	Water Shutter Mounting Bracket	1
25	56140029	Water Reservoir Rubber Drain Plug	1
26	56250004	Water Reservoir Drain Cap Nut	1
27	56130063	Ice Guide Tray	1
28	54290005	Water Shutter Assembly	1
29-1	11010220	Main Control Board	1
29-2	56200146	Control Board Box	2
29-3	56200147	Electronics Housing	1
29-4	11010221	Display Board	1
29-5	52050036	Display Panel	1
29-6	12010031	Light Assembly	1
29-7	12010032	LED Zephyr Logo Light	1
30-1	56140026	Upper Door Cap	1
30-1.1	01020077	Screw, ST4*35, Black	2
30-1.2	54210057	Black Screw Cover	2
30-2	54180079	Upper Articulating Hinge	1
30-2.1	01020103	Hinge Screw	2
30-3	50230062	Panel Ready Door	1
30-4	54180080	Lower Articulating Hinge	1
30-4.1	01020103	Hinge Screw	2
30-5	56140027	Lower Door Cap	1
30-5.1	01020077	Screw, ST4*35, Black	2
30-5.2	54210057	Black Screw Cover	2
30-6	54140417	Door Bracket	2
30-6.1	01020104	Door Bracket Screw	4
30-7	56220067	Door Gasket	1
30-8	54140418	Ice Scoop Holder	1
30-8.1	54210058	Ice Scoop Holder Screw Cover	2
30-8.2	01020092	Ice Scoop Holder Screw, M4*8	2

31	11050045	Ice Level Sensor	1
32	56150021	Ice Level Sensor Tube Assembly	1
33	50330057	Water Reservoir Drain Hose	1
34	56300011	Inner Liner Filter Screen	1
35	11050051	Ambient Air Temperature Sensor	1
36	50260033	Kick Plate	1
37	11040037	Door Switch	1
38	54210060	Water Filter Cover	1
39	11040041	Mechanical Power Button Assembly, SN10-13	1
39	11040044	Mechanical Power Button Assembly, SN14+	1
40	54140419	Capacitor Bracket	1
41-1	PRFLTR01	Ice Machine Water Filter	1
41-2	56200148	Water Filter Base	1
42-1	56200149	Water Filter Housing	1
42-2	11040042	Water Filter Switch	1
42-3	54140420	Water Filter Bracket	1
42-4	56090045	Water Filter Fixing Block	1
42-5	50330058	Water Filter Inlet Hose	1
42-6	50330059	Water Filter Outlet Hose	1
43-1	54140421	Condensor Cover Bracket, Right	1
43-1.1	01020105	Screw, M4*10	3
43-2	54270009	Condensor	1
43-2.1	01020098	Screw, ST4*8	4
43-3	54140422	Condensor Cover Bracket, Left	1
43-3.1	01020105	Screw, M4*10	3
43-4	54170046	Condensor Cover Baffle	1
43-4.1	01020105	Screw, M4*10	3
43-4.2	54210059	Condensor Cover	1
44-1	54190096	Condensor Fan Support Plate	1
44-1.1	54060017	Rubber Damper	1
44-2	12130053	Condensor Fan	1
44-3	54250024	Condensor Fan Blade	1
44-4	54190097	External Fan Base	1

44-4.1	54060018	Rubber Damper	1
44-4.2	01020106	Screw, M5*12	6
45	50350008	Leveling Leg	4
46-1	12160016	Compressor	1
46-2	11050046	Compressor Relay	1
46-3	11050047	Compressor Starter	1
46-4	12050056	Compressor Capacitor	1
47	54190098	Compressor Support Plate	1
48	56150022	Process Tube	1
49	56130064	Water Collection Tray	1
50	11050048	Smart Water Shut Off Module	1
51	11030235	Power Cord, SN10 - SN11	1
51	11030242	Power Cord, SN12+	1
52	54140423	Drainage Box Bracket	1
53-1	56200150	Drainage Box	1
53-2	56140029	Rubber Drain Plug	1
53-3	56250005	Drain Cap Nut	1
54	50330025	Drain Hose	1
54-1	54150032	Hose Clamp	2
55	50330060	Inner Liner Drain Hose	1
55-1	54150034	Hose Clamp	2
56-1	12180002	Drain Pump	1
56-2	54060019	Drain Pump Shock Absorber	1
56-3	50330061	Drain Pump Outlet Pipe	1
56-3.1	54150033	Hose Clamp	2
56-3.2	54150037	Hose Clamp	1
56-4	50330062	Drain Pump Inlet Pipe	1
56-4.1	54150037	Hose Clamp	1
57	56060008	Solenoid Valve	1
58	50330063	High Pressure Pipe Assembly	1
59	11050049	Dry Filter Sensor	1
60	56300012	Dry Filter	1
61-1	56140029	Drain Box Rubber Plug	1

61-2	56250005	Drain Box Nut	1
62-1	50330050	Water Inlet Connection Assembly	1
62-2	56250007	Drain Nut	1
62-3	56220068	Silicone Gasket	1
63	56060009	Check Valve	1
64	12060010	Drainage Connector	1
65	54190099	Water Inlet Fixing Plate	1
66-1	12060011	Water Inlet Connector	1
66-1.1	54150039	Blue Water Inlet Clip	2
66-2	54190100	Water Inlet Base	1
66-3	56250006	Plate Elbow Nut	1
67	54140412	Anti-Tip Bracket, Left	1
68	54140413	Anti-Tip bracket, Right	1
69-1	01020081	Screw, M4*20	2
69-2	02170014	Flat Washer	2
69-3	02170015	Lock Washer	2
70	50290001	Ice Scoop	1
71	56210130	Ice Scoop Bracket Screw	2
72	56210075	Door Hinge Decorative Hole Cover	4
73	50330048	Water Inlet Pipe, 1/4" OD, 9.5ft	1
74	50330049	Drain Hose, 3/8" ID, 9.5ft	1
75	50330050	Water Inlet Connection Assembly	1
76	54150032	Hose Clamp	2
77	15000026	Cleaning Brush	1
78	15000027	Cleaning Brush	1
79	PRDS601	Ice Machine Descaler, 6oz	1
80	50330051	Door Stopper Pin	2
81	54150039	Blue Water Inlet Clip	2