FLEXSTEEL®

Power Swivel Glider Recliner with Power Headrest, Heat & Massage

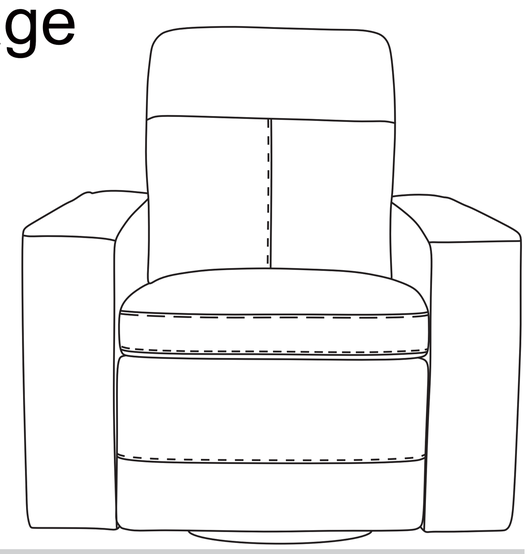

IMPORTANT NOTE

Read these instructions carefully and familiarize yourself with each procedure before assembling the furniture. Check that you have all the component parts and familiarize yourself with each part before proceeding.

Take all the fittings out of the plastic bad and separate them into groups. Ensure you have enough space to lay out all the parts before assembly. To prevent damage to the parts, we recommend that you assemble the unit on a soft, level surface.

Part List

A. Back
1 piece

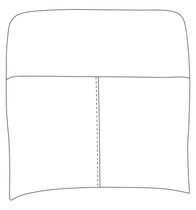

B. Seat
1 piece

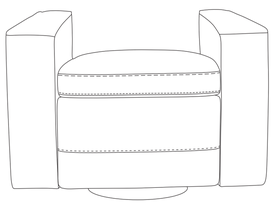

C. Transformer
1 piece

Assembly Instructions

STEP 1
Detach the Transformer (C) from the bottom of the Seat (B). (See Figure 1.)

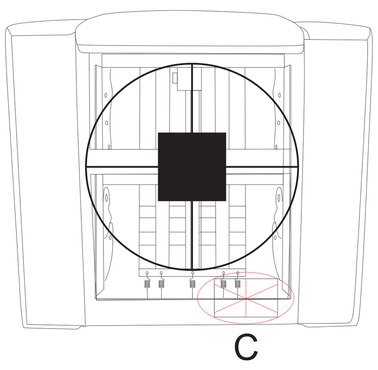

Figure 1

STEP 2
Lay the Back (A) face down on the Seat (B).
Zip the fabric on the bottom of the Back (A) with the back of the Seat (B). (See Figure 2.)

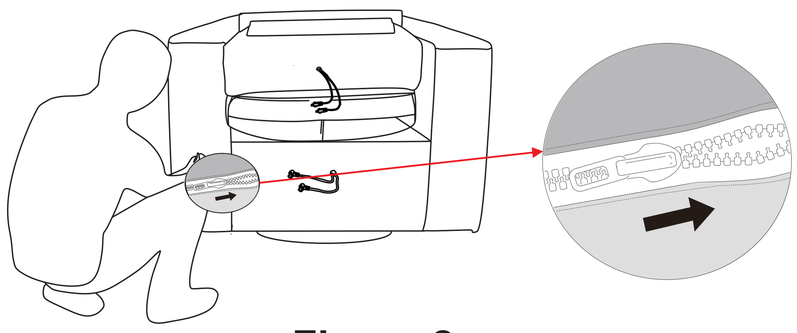

Figure 2

STEP 3
Connect the Headrest and Lumbar cables, and Air Massage tubes between the Back (A) and the Seat (B). (See Figure 3.)

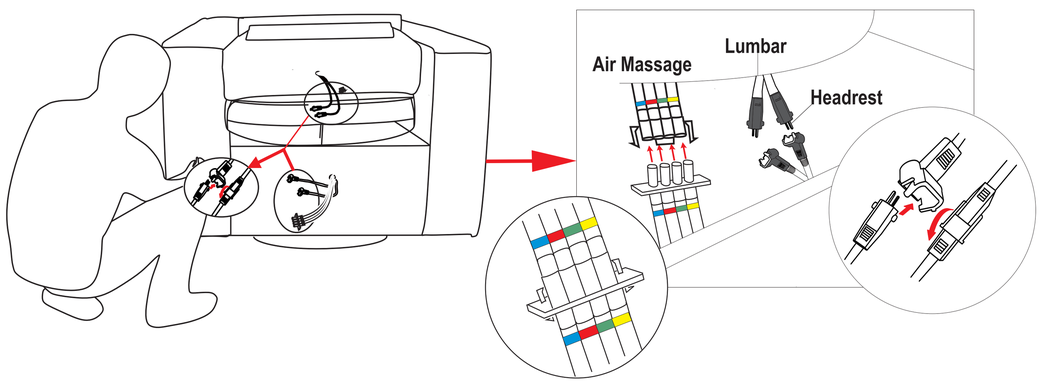

Figure 3

STEP 4
Attach the Back (A) to the Seat (B). Ensure the latches fit well. (See Figure 4.)

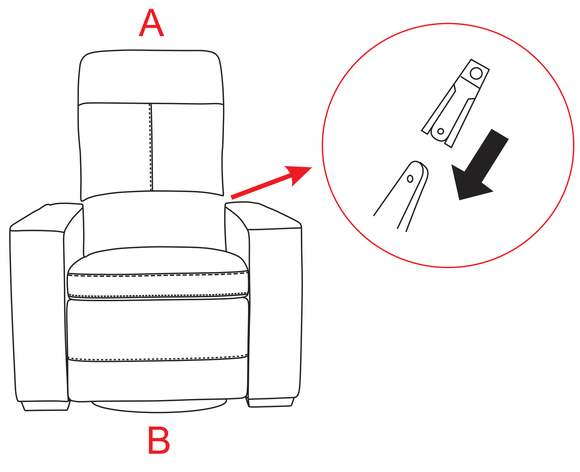

Figure 4

STEP 5
Fasten the back flap to the bottom of the furniture. (See Figure 5.)

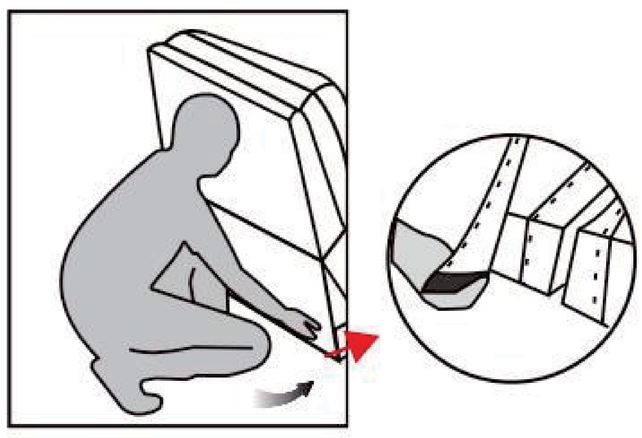

Figure 5

STEP 6
Connect the base motor cable to the Transformer (C) then plug it into a nearby outlet. (See Figure 6.)

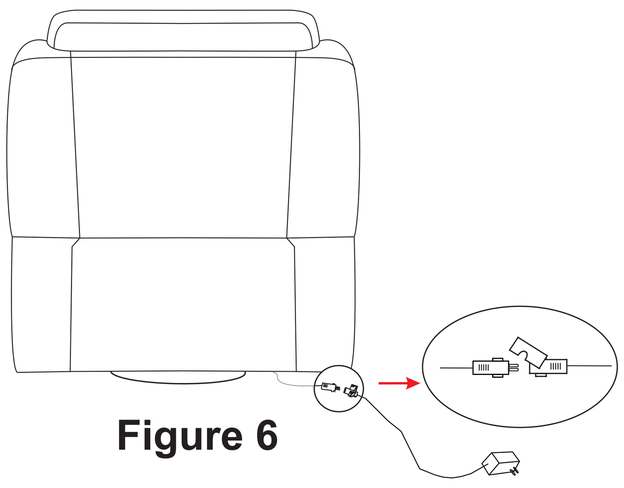

Figure 6

Disassembly Instructions

Unzip the zipper between the Back (A) and the Seat (B). Pull up the spring leaf in bracket, lift the Back (A) up and lay it face down on the Seat (B). Then disconnect all the cables and tubes. (See Figure 7.)

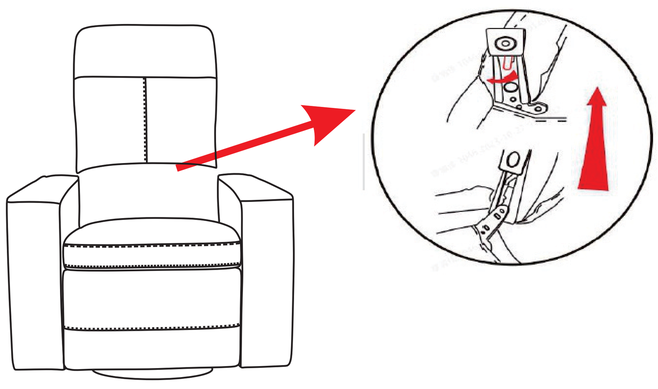

Figure 7

IMPORTANT NOTE

- To avoid any risk of suffocation to children or pets, dispose of all plastic bags immediately.
- To ensure proper performance, occasionally check for loose hardware and tighten as needed.
- If the reclining functions are not working properly, check for loose cable connections before contacting the retailer.