ACCENT TABLE

CT-1100

BREEZESTA tm

Recycled Poly Furniture

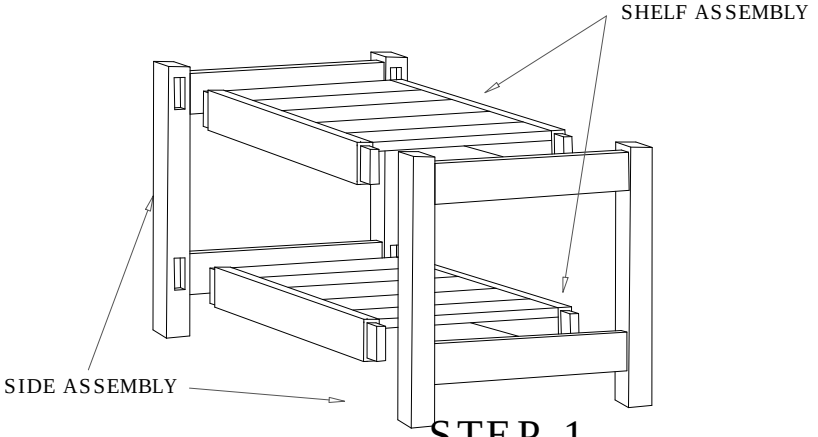

STEP 1

Fit Shelves Assemblies into slots on Side Assemblies.

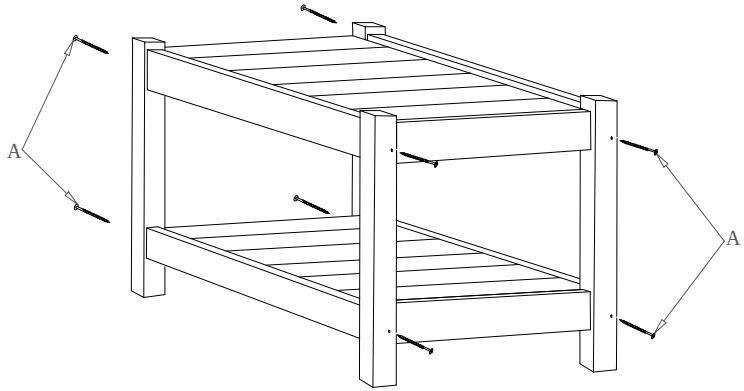

STEP 2

Using screws (A), in pre drilled holes, attach Side Assemblies to Shelf Assemblies as shown.

LIST OF PARTS
- Side Assemblies (2)
- Shelf Assemblies (2)
- Colored Screws "A" (8)
- Insert Bit Tool (1)

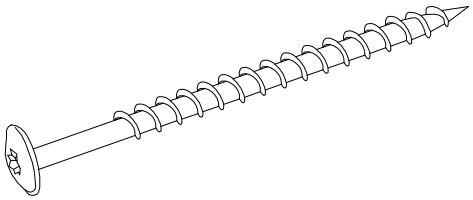

A-2.5"(8 pcs.)colored

Ver 13.0