DETAILED DIMENSIONS

8606-19 Alice Round End Table

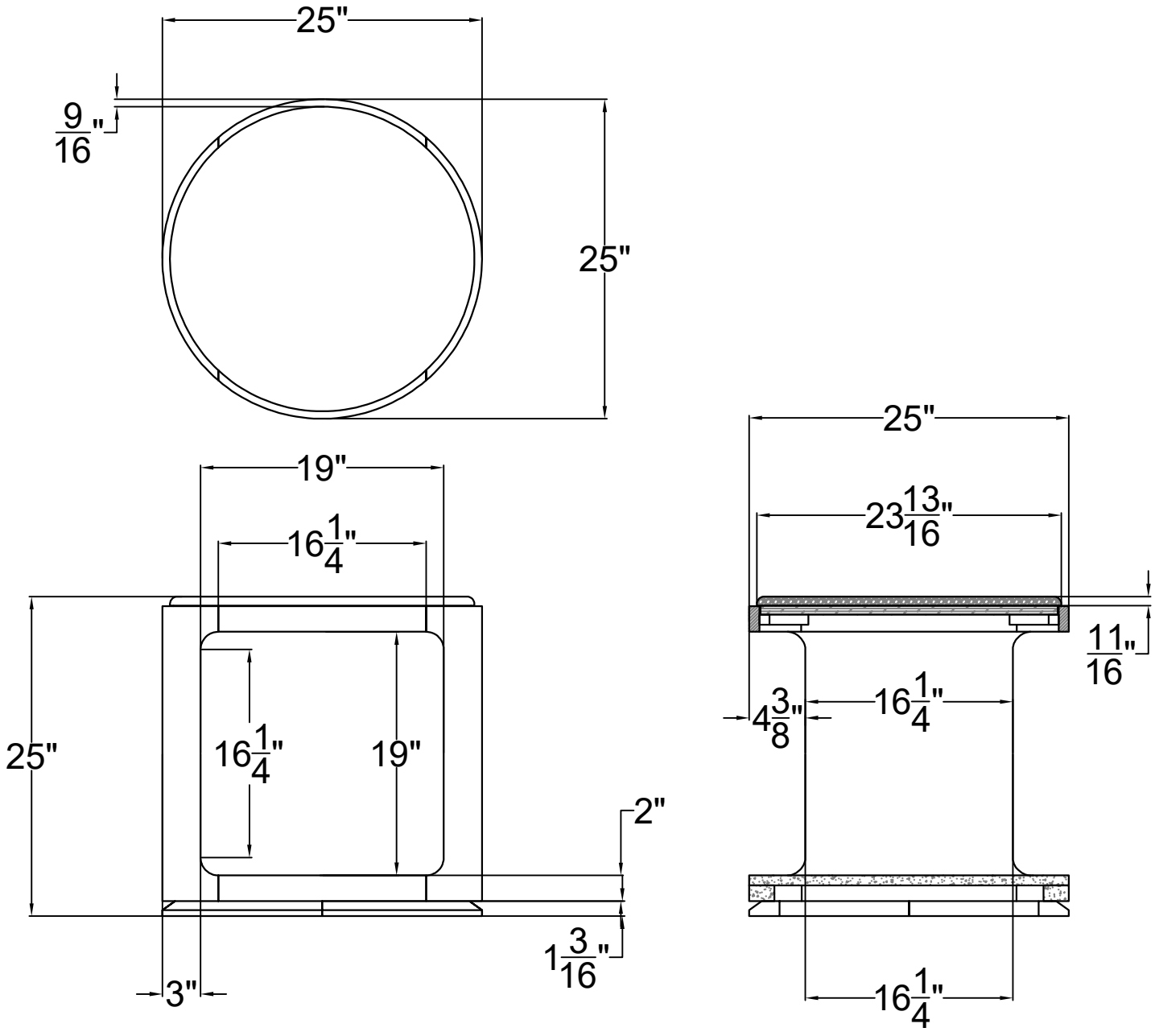

Due to the handcraed nature of our product, variations to plus or minus 1" of our listed measurements could occur. Specifications are subject to change without notice.