Product Assembly Instructions

Item # : LCBTPUOK Bennet Pub Table Oak

Thank you for purchasing this quality product. Be sure to check all packing material carefully for small parts, which may come loose inside the carton during shipment . Please identify and count all parts and compare with the HARDWARE LIST below.

Caution : Please read instructions carefully before unpacking assembly parts. Sharp , exposed staples can cause injury , therefore , for your protection , please remove any exposed staples used in packing.

*** Retain the Allen key for regular maintenance. We recommend tightening all screws every three months to ensure continued stability and performance. ***

1. We recommend to assemble this product with the assistance of another person. This will provide a smooth assembly process , and can help eliminate self injuries or damage to the product during assembly.
2. Please do not over tighten screws or bolt until the assembly is completed.
3. Please put all parts on a smooth , flat surface before assembly , and carefully follow the assembly steps to assemble your newly purchased correctly and efficiently.

PARTS LIST		
NO.	COMPONENT	QTY.
A	Table Top	1 pc
B	Table Leg	4 pcs

HARDWARE LIST		
NO.	COMPONENT	QTY.
1	Hex Bolt 5/16" x 2 1/2"	8 pcs
2	Spring Washer	8 pcs
3	Flat Washer	8 pcs
4	Wrench	1 pc

Step 1

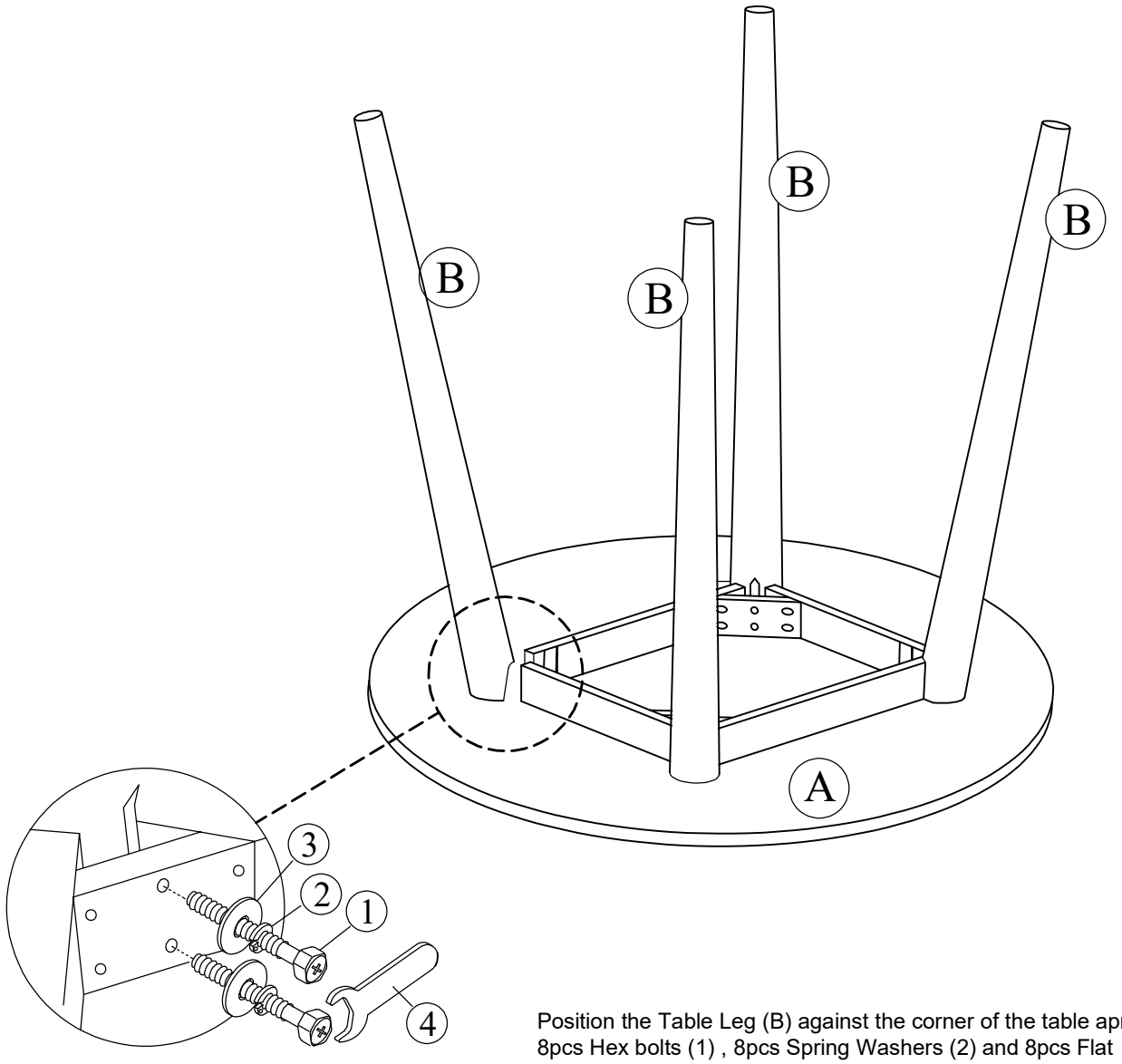

Position the Table Leg (B) against the corner of the table apron. Insert 8pcs Hex bolts (1) , 8pcs Spring Washers (2) and 8pcs Flat Washers (3) using Wrench (4). Fully tighten all the bolt securely.

Version #1 Date: 07/14/2025

Product Assembly Instructions

Item # : LCBTBABLKOK26 Bennet 26" Barstool

Thank you for purchasing this quality product. Be sure to check all packing material carefully for small parts, which may come loose inside the carton during shipment . Please identify and count all parts and compare with the HARDWARE LIST below.

Caution : Please read instructions carefully before unpacking assembly parts. Sharp , exposed staples can cause injury , therefore , for your protection , please remove any exposed staples used in packing.

*** Retain the Allen key for regular maintenance. We recommend tightening all screws every three months to ensure continued stability and performance. ***

1. We recommend to assemble this product with the assistance of another person. This will provide a smooth assembly process , and can help eliminate self injuries or damage to the product during assembly.
2. Please do not over tighten screws or bolt until the assembly is completed.
3. Please put all parts on a smooth , flat surface before assembly , and carefully follow the assembly steps to assemble your newly purchased correctly and efficiently.

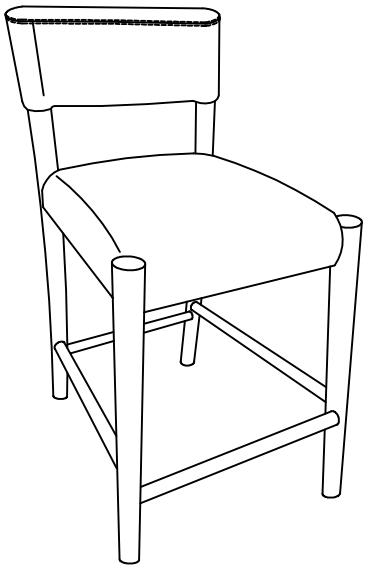

PARTS LIST		
NO.	COMPONENT	QTY.
A	Chair Back Panel	2 pcs
B	Chair Seat	2 pcs
C	Front Leg - Left (CL)	2 pcs
D	Front Leg - Right (CR)	2 pcs
E	Long Stretcher	4 pcs
F	Short Stretcher	2 pcs

HARDWARE LIST		
NO.	COMPONENT	QTY.
1	JCBB Bolt M8 x 40mm	4 pcs
2	JCBB Bolt M8 x 80mm	8 pcs
3	Spring Washer	20 pcs
4	Flat Washer	20 pcs
5	Hex Nut	8 pcs
6	CB Screw M4 x 38mm	12 pcs
7	Allen Wrench	1 pc
8	Wrench	1 pc

* Phillips screwdriver not included *

Step 1

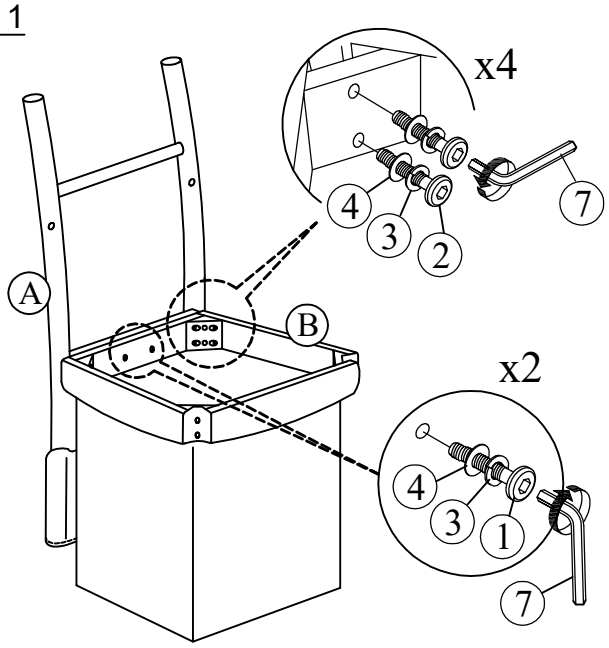

Important Note :
Ensure all bolts remain loosely tightened until final assembly adjustments are made.

Do not fully tighten from this step
Attach Chair Seat (B) to the centre section 2 holes on Chair Back Panel (A) using 2pcs JCBC bolts (1), 2pcs Spring Washers (3) and 2pcs Flat Washers (4). Loosely tighten with Allen Wrench (7). Insert 4pcs JCBC bolts (2), 4pcs Spring Washers (3) and 4pcs Flat Washers (4) to the corner holes as shown in the diagram. Loosely tighten with Allen Wrench (7).

Step 2

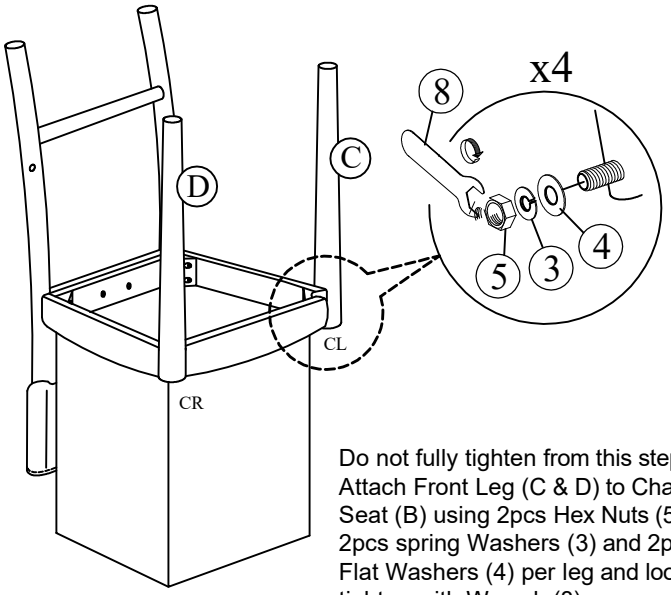

Do not fully tighten from this step. Attach Front Leg (C & D) to Chair Seat (B) using 2pcs Hex Nuts (5) , 2pcs spring Washers (3) and 2pcs Flat Washers (4) per leg and loosely tighten with Wrench (8).

Step 3

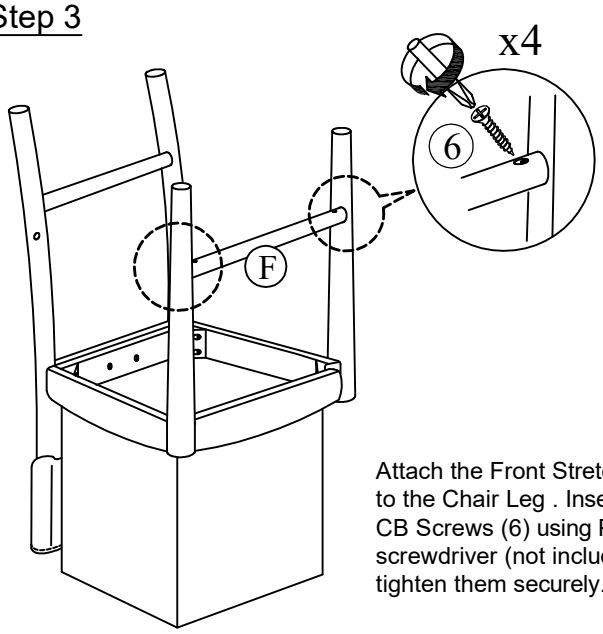

Attach the Front Stretcher (F) to the Chair Leg . Insert 2pcs CB Screws (6) using Phillips screwdriver (not included) and tighten them securely.

Step 4

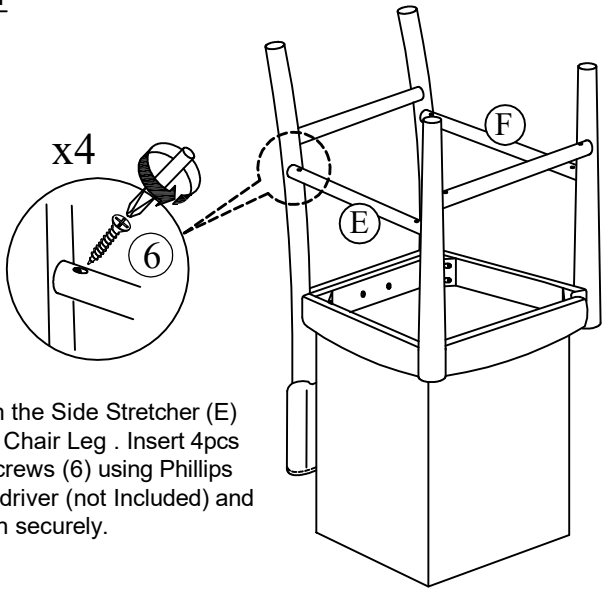

Attach the Side Stretcher (E) to the Chair Leg . Insert 4pcs CB Screws (6) using Phillips screwdriver (not Included) and tighten securely.

Step 5

Final Adjustment Step :

1. Place the barstool on a flat, level surface.
2. Check that all legs make even contact with the floor. If uneven, adjust the Box Seat (B) by tilting as needed.
3. Once level, securely tighten all bolts .

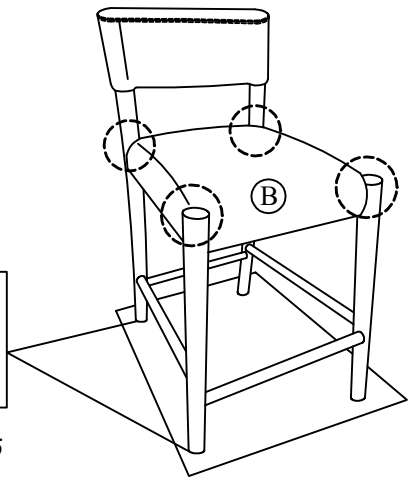

NOTE: ENSURE ALL LEGS ARE LEVEL TO THE FLOOR BEFORE FULLY TIGHTENING ALL BOLTS .

Version #1 Date: 07/14/2025