falmec

STELLA

Version
FDNUVMTR600 - Motor 600 CFM

Collection
Design+

EAN code
8034122359144

FEATURES

Scotch brite stainless steel (AISI 304)
Perimeter suction
Electronic control
Metallic grease filter, removable and washable
Remote control included
Dynamic LED Light (2700K - 5600K)
Motor sold separately
SRS Speed reduction system

Recommended mounting maximum distance from cooking surface to hood bottom: 150cm (59")

OPTIONAL ACCESSORIES

FDNUVMTR600
FDNUVMTR600 - Motor 600 CFM
KACL.815
Protective cleaning cloths for stainless steel (box 10 pcs)
KACL.928
Filters spare
KACL.931
Filters Carbon.Zeo - Spare
KACL.939#BF
Ceiling re-circulation filtering kit (only for Slim Motor)
KACL.953#BF
Carbon.Zeo vertical outlet ceiling filter unit kit

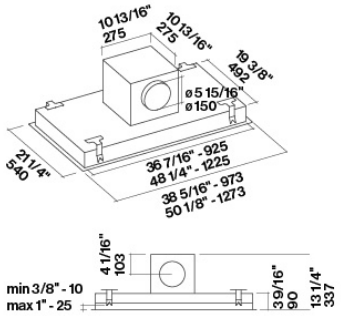

TECHNICAL FEATURES

Installation type
Ceiling
Dimensions
48 / 120 cm
Finish
Scotch brite stainless steel (AISI 304)
Motor
600 CFM
Type of control
Electronic control
Speed settings
4
Lighting
Led 4x3,6 W (4000K)
Filter
2 x Metallic filter "Base" - 290x326 mm
Maximum distance
Gas hob: 24 in
Electric hob: 24 in

PACKAGING:WEIGHTS AND VOLUMES

STELLA Gross weight
65 lbs
Net weight
58 lbs
Volumes
7 ft³
Packaging size
Length
56 in
Height
8 in
Depth
27 in
REMOTE MOTOR
FDNUVMTR600 - Motor 600 CFM **Gross weight**
23 lbs
Net weight
20 lbs
Volumes
3 ft³
Packaging size
Length
18 in
Height
14 in
Depth
16 in

CONSUMPTION AND CONNECTION FEATURES

Plug type
Hood comes standard with Nema 5-15P power cord
ENERGY CLASS
0