# YAMAHA NS-AW992

UCG

## OUTDOOR SPEAKER
## ENCEINTE D'EXTERIEUR

YAMAHA CORPORATION
©2009 Yamaha Corporation All right reserved.
Printed in Indonesia WT55050

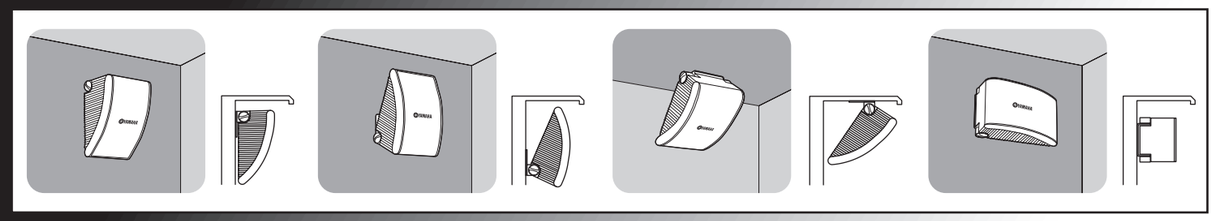

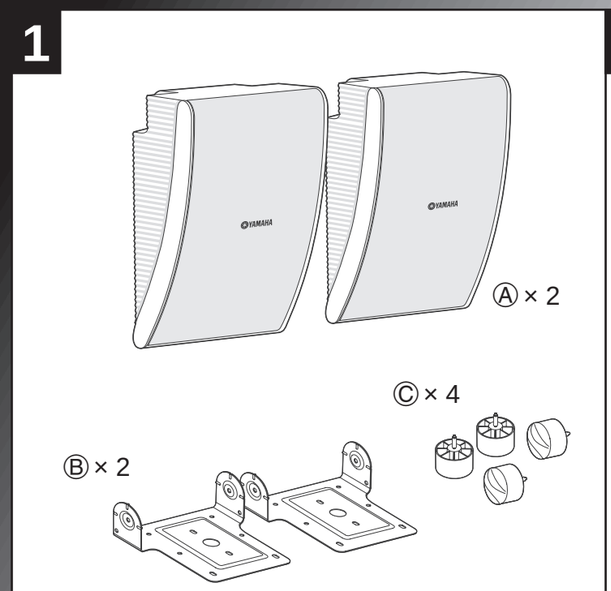


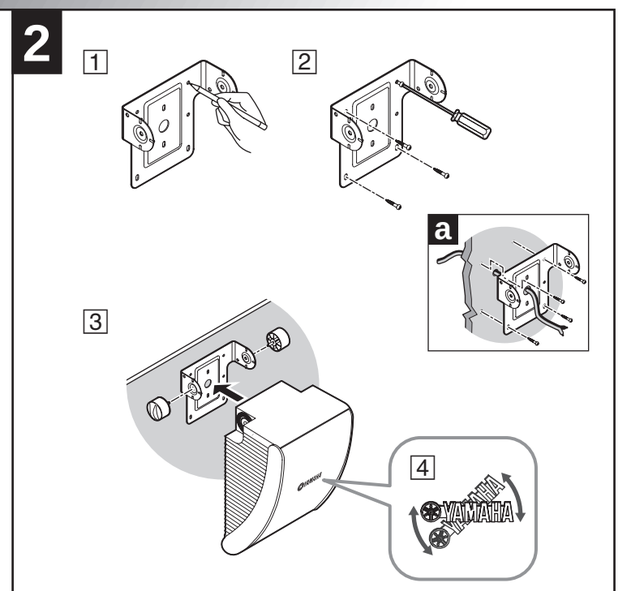


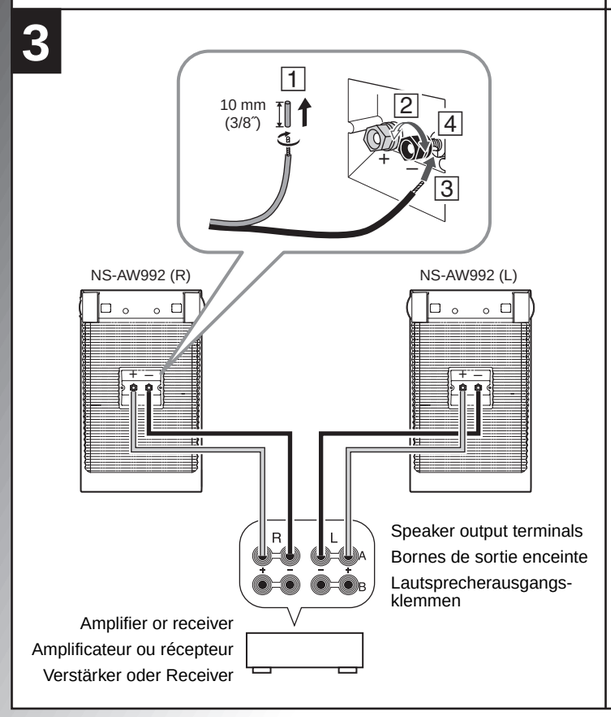


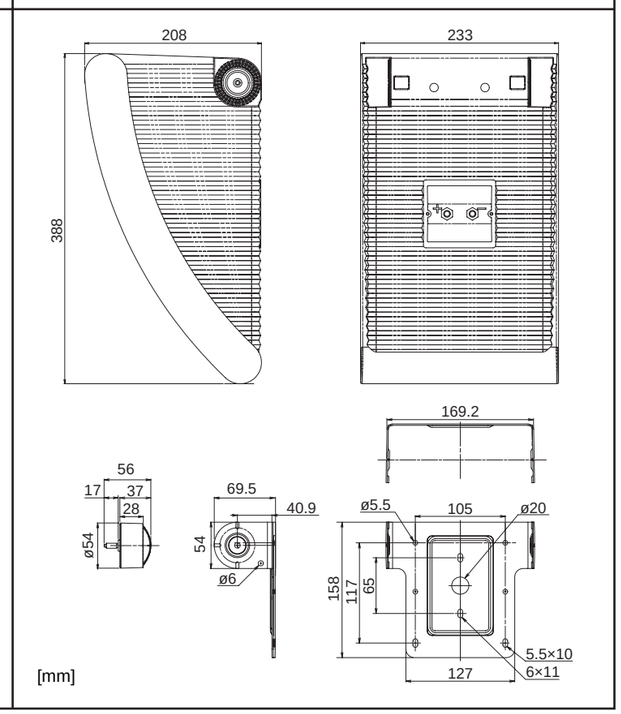


# English

## CONSUMER PRECAUTIONS

Read these precautions carefully before setting up your NS-AW992 speakers.

- When mounting these speakers, be sure to work with two or more persons for safety.
- When installing these speakers outdoors, try to minimize their exposure to rain and snow by mounting the speaker in corners or under eaves.
- Since these speakers are to be wall / ceiling mounted, it is essential that they are firmly secured. **Be sure to consult a reliable source about the best type of fastener for your particular wall / ceiling's construction.**
- Do not attach them to thin plywood or soft wall / ceiling surface materials as the screws may tear free, causing the speakers to fall and be damaged, or result in personal injury.
- Do not fasten the speakers to wall / ceiling with nails, adhesives, or other unsafe hardware. Long-term use and vibrations may cause them to pull free.
- Do not place the speakers where they are liable to be knocked over or struck by falling objects. Stable placement will also ensure better sound performance.
- When changing the angle of the speakers, be sure to adjust the angle after loosening the knob on the both sides. The speakers may be damaged by excessive power.
- Lower the power amplifier / receiver volume control before changing input sources. Always turn the amplifier / receiver unit off when installing or removing input cables.
- Anytime you note distortion, reduce the volume control on your power amplifier / receiver to a lower setting. Never allow your power amplifier to be driven into "clipping".
- Do not attempt to modify or fix the speakers. Contact qualified Yamaha service personnel when any service is needed. The cabinet should never be opened for any reasons.
- Do not attempt to clean the speakers with chemical solvents as this might damage the finish. To clean wipe with a dry, soft cloth.
- **Secure placement or installation is the owner's responsibility. Yamaha shall not be liable for any accident caused by improper placement or installation of speakers.**

## 1 UNPACKING

After unpacking, please inspect contents to confirm all the following items are contained.

Ⓐ Speaker × 2
Ⓑ Bracket × 2
Ⓒ Knob × 4

## 2 MOUNTING THE SPEAKERS

To wall / ceiling mount the speakers, use the included bracket.

1. Using the bracket as a template mark the locations (four points) of the key hole slots on the mounting area.
2. Using appropriate hardware (not included) securely fasten the bracket to the wall / ceiling.
3. Position the speaker in the bracket and secure the speaker by using the two knobs included.
4. Rotate the YAMAHA emblem according to the position of the speaker.

When using the brackets to mount the speakers on a wall / ceiling, please use safety wire (not included) between the speaker and the bracket to prevent the speaker from falling. Please use safety wire which withstand load is 3.7 kg (8.2 lbs.) or more. Fix the safety wire with M5 screw (inch screw: No. 10-32) by using the screw hole [diameter: 5 mm (1/4″), depth: 15 mm (5/8″)] at the rear of the speakers. For safety, please confirm that installed screw is in the screw hole more than 10 mm (3/8″).

If speaker cable (not included) is being fed from a hole in the wall / ceiling behind the bracket, pull this speaker cable through the hole in the bracket before mounting the bracket [figure 2 - a].

## 3 CONNECTING YOUR AMPLIFIER / RECEIVER

Before making connections, make sure that the amplifier / receiver is switched off.

### CONNECTIONS

- Connect the input terminals at the rear of the speakers to the speaker output terminals of the amplifier / receiver with the speaker cables (not included).
- Connect each speaker making sure not to reverse the polarity "+" (red), "–" (black). If the speaker is connected with reversed polarity, the sound will be unnatural and lack bass.

### HOW TO CONNECT

1. Remove approximately 10 mm (3/8″) of insulation from the end of each speaker cable and twist the exposed wires of the cable together to prevent short circuits.
2. Unscrew the terminal knob.
3. Insert one bare wire into the hole in the side of each terminal.
4. Tighten the terminal knob to secure the wire.

**Note:** Do not let the bare speaker wires touch each other as this could damage the speaker or amplifier / receiver, or both.

## SPECIFICATIONS (For single speaker)

| | | |
|---|---|---|
| **Type** | | 2-Way Acoustic Suspension |
| **Driver** | **Tweeter** | 2.5 cm (1″) soft dome type |
| | **Woofer** | 20 cm (8″) cone type |
| **Frequency response** | | 50 Hz to 20 kHz (–10 dB) |
| **Impedance** | | 6 ohms |
| **Nominal input** | | 60 W |
| **Maximum input** | | 180 W |
| **Sensitivity** | | 90 dB / 2.83 V, 1 m |
| **Crossover frequency** | | 6 kHz |
| **Dimension (W × H × D)** (excluding bracket and knobs) | | 233 × 388 × 208 mm (9-1/8″ × 15-1/4″ × 8-1/4″) |
| **Weight** (including bracket and knobs) | | 4.15 kg (9.1 lbs.) |
| **IP rating** | | IPX3 |
| **Materials of the main parts** | | Enclosure: HIPS<br>Punching grill: Aluminum (powder coating)<br>Bracket: Steel [t = 1.6 mm (1/16″)] (powder coating) |
| **Movable angle** | | 10 degree pitch |

* Specifications subject to change without notice due to product improvements.

**Warranty policy for European Economic Area (EEA) and Switzerland, Australia customer**

In the unlikely event that your Yamaha product needs guarantee service, please contact the dealer from whom it was purchased. If you experience any difficulty, please contact Yamaha representative office in your country. You can find full details on our website
EEA and Switzerland: (http://www.yamaha-hifi.com/ or http://www.yamahauk.com/ for U.K. resident).
Australia: (http://www.yamahamusic.com.au/)

**Warranty policy for U.S. and Canada customer**

Your Yamaha product is covered by a limited warranty for two years from the date of purchase. In the unlikely event of failure due to defective materials or workmanship, Yamaha will repair or replace them at no charge.
For full details, please see the included warranty card or visit our website.
U.S.: (http://www.yamaha.com/yec/), Canada: (http://www.yamaha.ca/)

**Information for Users on Collection and Disposal of Old Equipment**

This symbol specified in the Directives 2002/96/EC indicates that used electrical and electronic products should not be mixed with general household waste.
For proper treatment to avoid harmful effect on human health and environment, please contact your local municipality, your waste disposal service or the point of sale where you purchased the items.