Foster Cooktops

Quadra line cooktop FT - **7217 942**

HIGHLIGHTS

Professional grids.
All the Foster cooker hobs are equipped with cast-iron grids, a perfect material due to its many properties: high thermal capacity that improves the cooking effciency; weight that improves safety; sturdiness; easiness to clean.

Metal Knobs.
Exclusive and original, the Foster metal knobs are an example of the strength and quality of the materials used. A distinctive feature shared by all the Foster elements in this collection to, form an elegant uniformity in the kitchen.

Safe Cooking.
All Foster cooker hobs are equipped with safety valves. These shut off the gas supply very quickly if the flame accidentally goes out. The utmost freedom of movement it is guaranteed by the electronic under knob ignition that allows a one-hand movement.

Flush/mount installation.
The flush-mount cooker hobs have no vertical edge, and can be sunk into a recess in the worktop's surface (fm), or simply placed on the worktop like a standard built-in product (om).

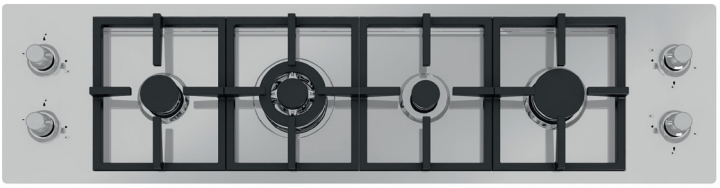

Series	**Quadra**
Model	Quadra line cooktop FT
Dimensions	54 1/2" x 14"
Maintop	AISI 304 Stainless Steel
finish	Satin finish
Kind of Edge	1 mm - flush edge
Installation	Flush-mount or overmount
flush-mount cut-out	see technical sheet
overmount cut-out	53 45/64" x 13 3/16"
Grids	Enamelled cast iron
hob controls	Knobs
Knobs	solid Metal
Safety	Safety valves
Total power Btu/h	26,500 Btu
burners	4
Triple crown	5,300 - 11,000 Btu/h
rapid	3,700 - 7,600 Btu/h
semirapid	1,500 - 5,100 Btu/h
auxiliary	900 - 2,800 Btu/h
Simmer ring	1
Simmer Rate	900 Btu/h
Technical requirments	
Electrical supply	120V 60Hz
Gas std setting	Natural Gas
LP Gas conversion	kit for all burners included

Certifications	**CSA certified for US & Canada**

FOSTER MILANO INC.
6001 NORTH POWERLINE ROAD
FORT LAUDERDALE, FLORIDA 33309
info@foster-us.com
www.foster-us.com

Foster
kitchen appliances

Foster Cooktops

Quadra line cooktop FT - **7217 942**

DIMENSIONS

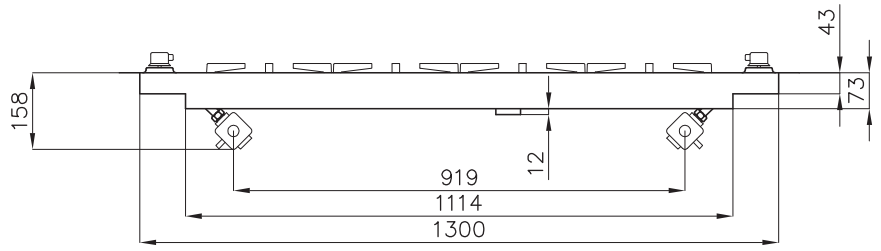

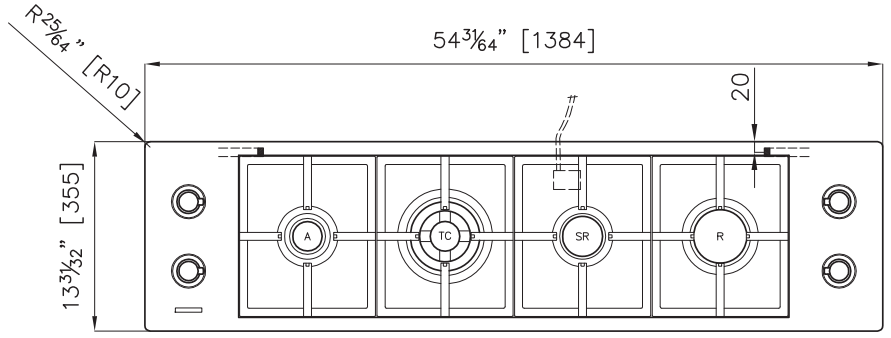

CUT OUT

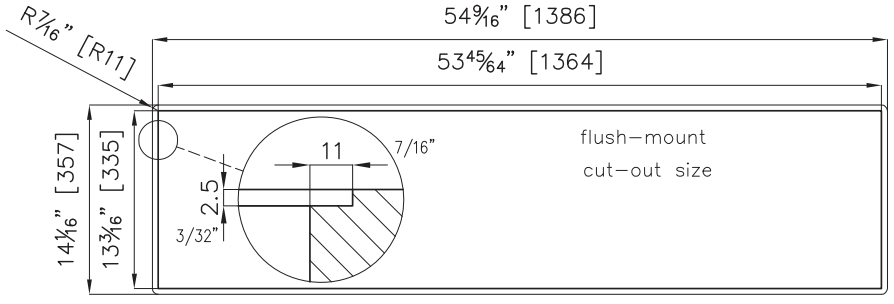

Foster
kitchen appliances