DETAILED DIMENSIONS

8010-CS MATTEO CHAIRSIDE CHEST

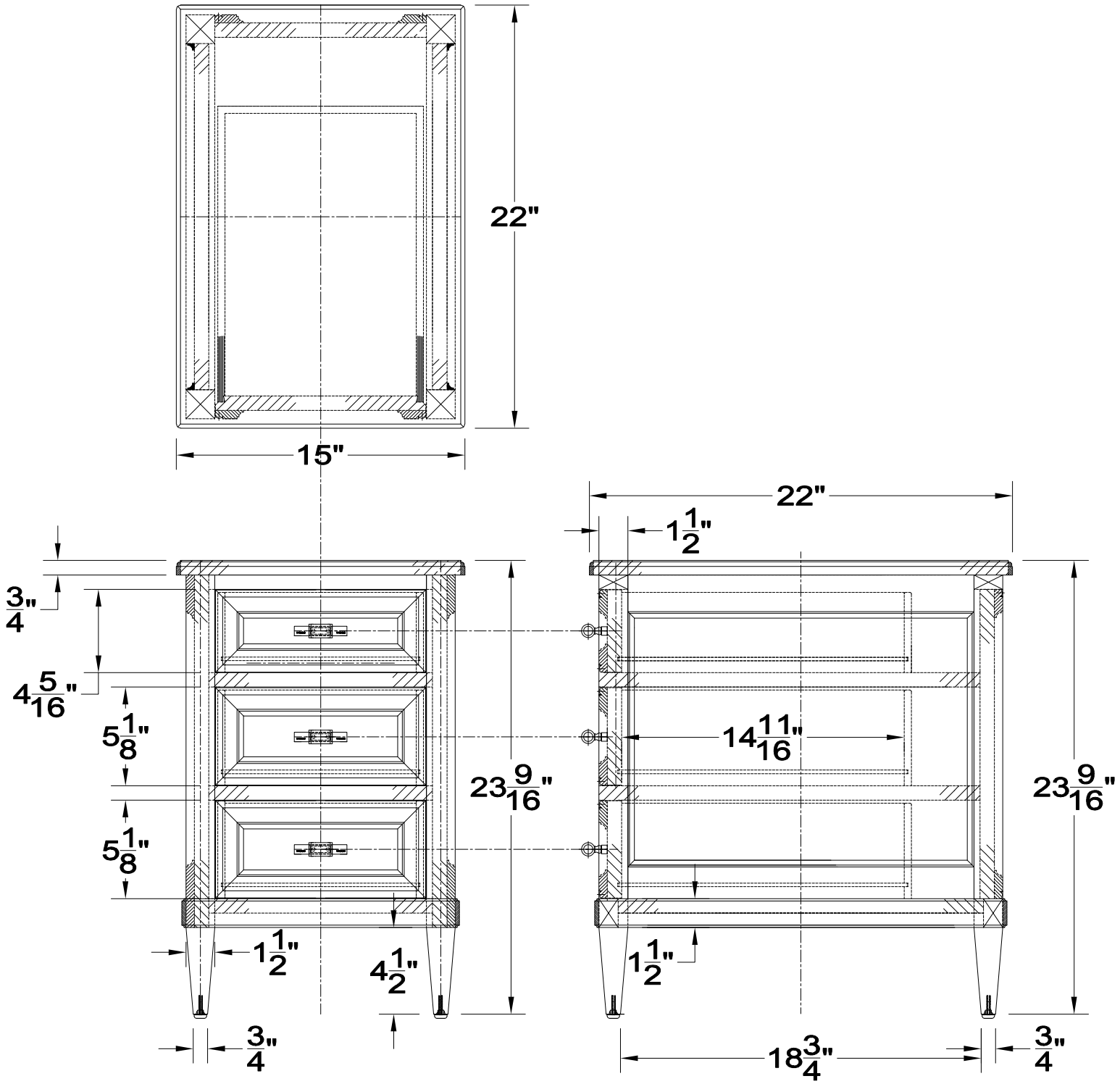

Due to the handcraed nature of our product, variations to plus or minus 1" of our listed measurements could occur. Specifications are subject to change without notice.