FLEXSTEEL®

Power Recliner, Power Headrest, Lumbar, Heat & Full Body Massage

IMPORTANT NOTE

Read these instructions carefully and familiarize yourself with each procedure before assembling the furniture. Check that you have all the component parts and familiarize yourself with each part before proceeding.

Take all the fittings out of the plastic bag and separate them into groups. Ensure you have enough space to lay out all the parts before assembly. To prevent damage to the parts, we recommend that you assemble the unit on a soft, level surface.

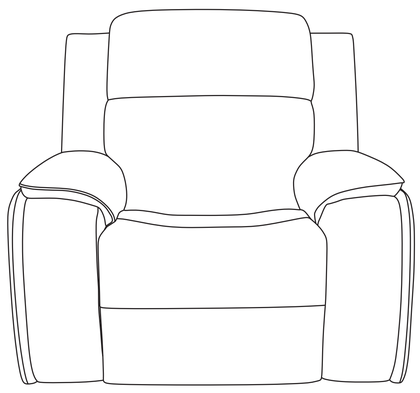

Part List

A. Back
1 piece

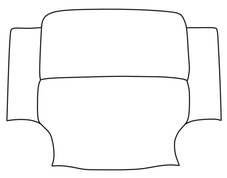

B. Seat
1 piece

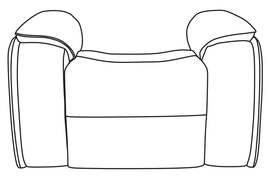

C. Transformer
1 piece

D. AC Power Cable
1 piece

Assembly Instructions

STEP 1

Detach the Transformer (C) and the AC Power Cable (D) from the bottom of the Seat (B). (See Figure 1.)

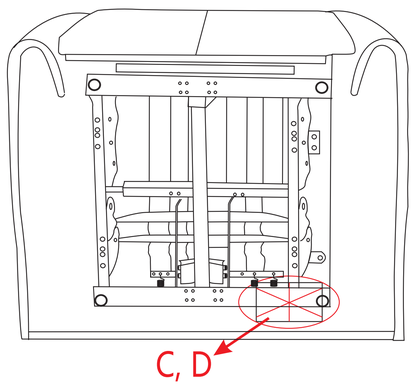

Figure 1

STEP 2

Lay the Back (A) face down on the Seat (B).
Zip the fabric on bottom of the Back (A) with back of the Seat (B). (See Figure 2.)

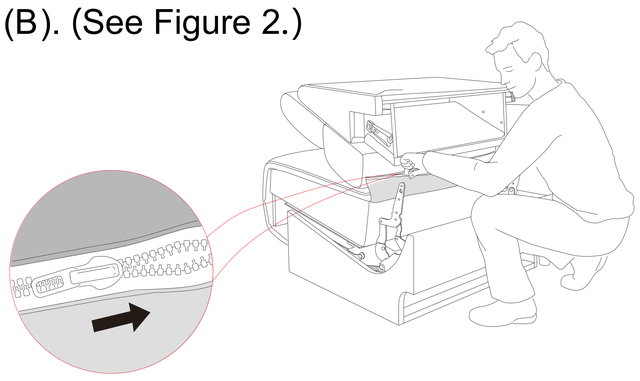

Figure 2

STEP 3

Connect the foot massage, dial switch, headrest, lumbar cables and air massage tubes between the Back (A) and the Seat (B). (See Figure 3.)

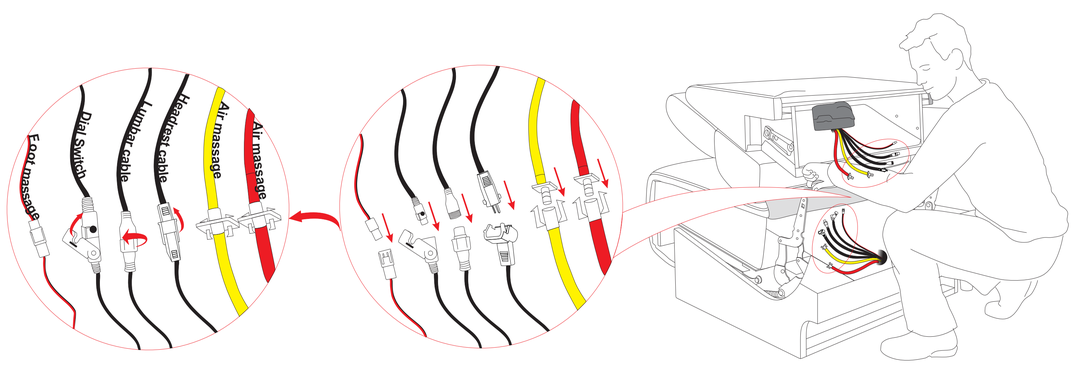

Figure 3

STEP 4

Attach the Back (A) to the Seat (B). Ensure the latches fit well. (See Figure 4.)

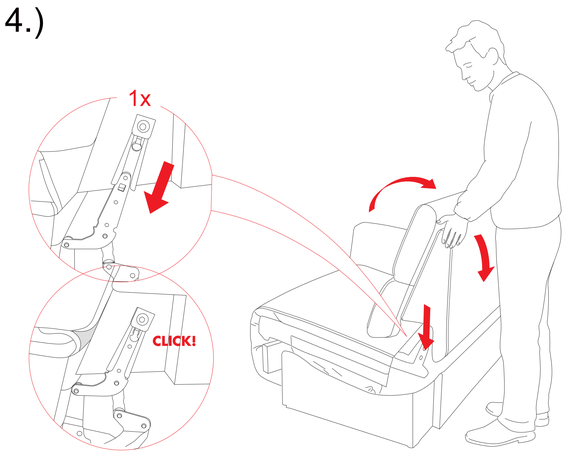

Figure 4

STEP 5

Fasten the back flap to the bottom of the furniture. (See Figure 5.)

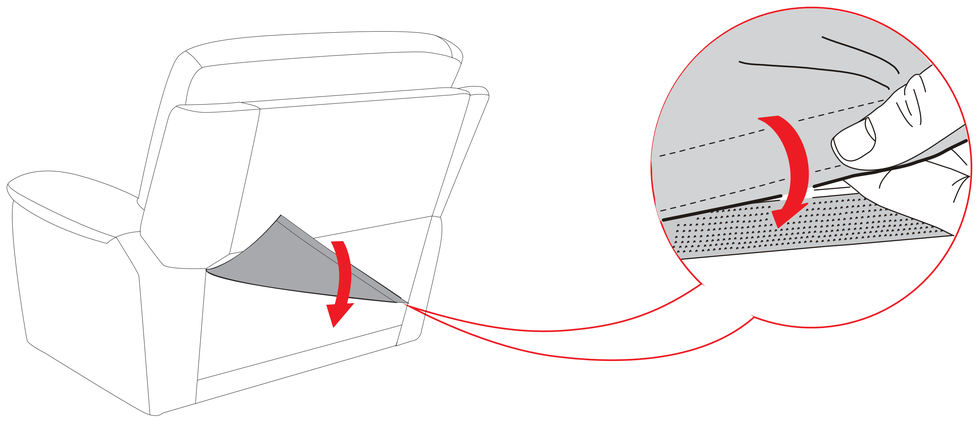

Figure 5

STEP 6

Connect the base motor cable and AC Power Cable (D) to the Transformer (C). Plug the AC Power Cable into nearby outlet. (See Figure 6.)

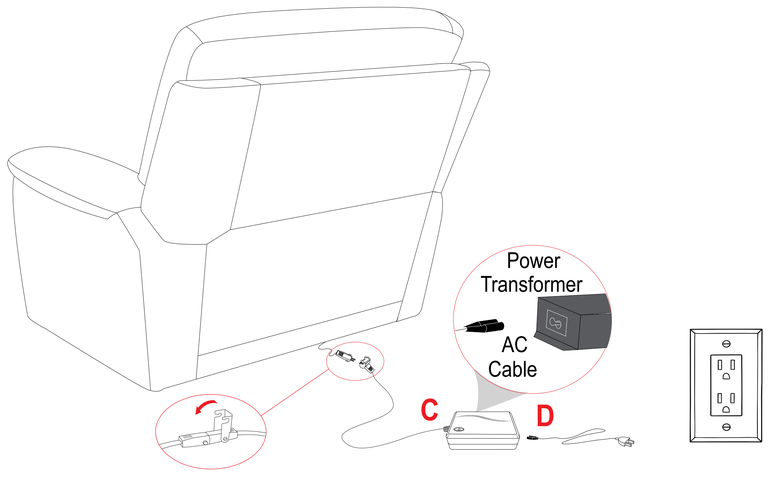

Figure 6

Disassembly Instructions

Unzip the zipper between the Back (A) and the Seat (B), then disconnect all the cables and air massage tubes.
Pull up the spring leaf in bracket, then lift Back (A) up. (See Figure 7.)

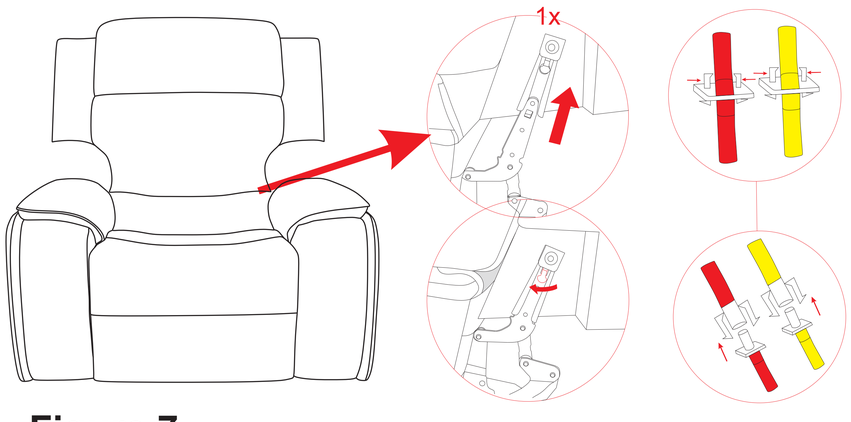

Figure 7

Hidden Cupholder and Dial Switch

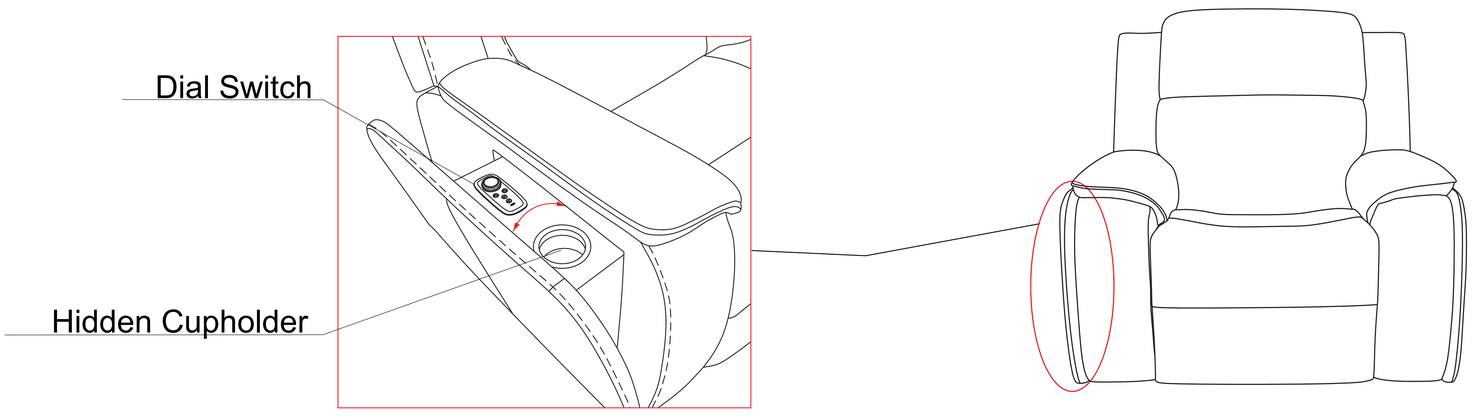

IMPORTANT NOTE

- To avoid any risk of suffocation to children or pets, dispose of all plastic bags immediately.
- To ensure proper performance, occasionally check for loose hardware and tighten as needed.
- If the reclining functions are not working properly, check for loose cable connections before contacting the retailer.