DETAILED DIMENSIONS

8610-82 Stewart Sideboard

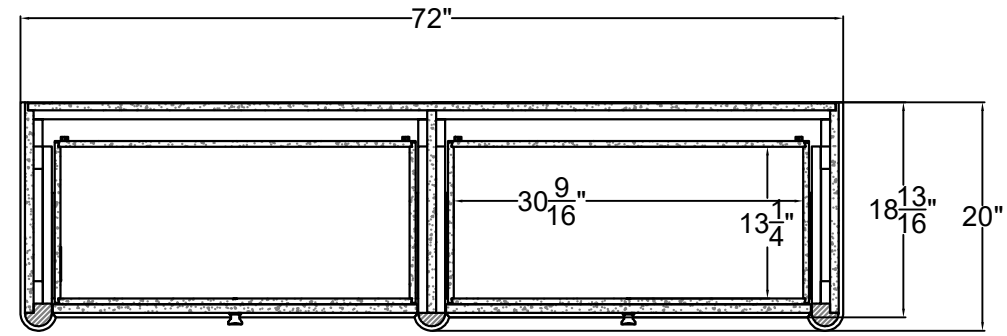

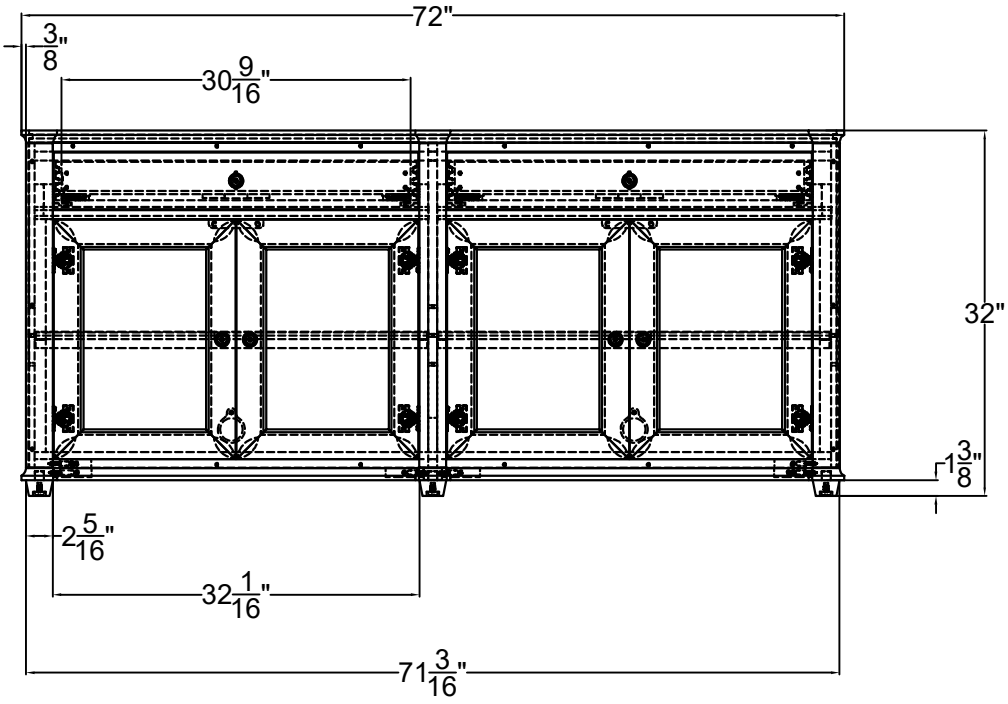

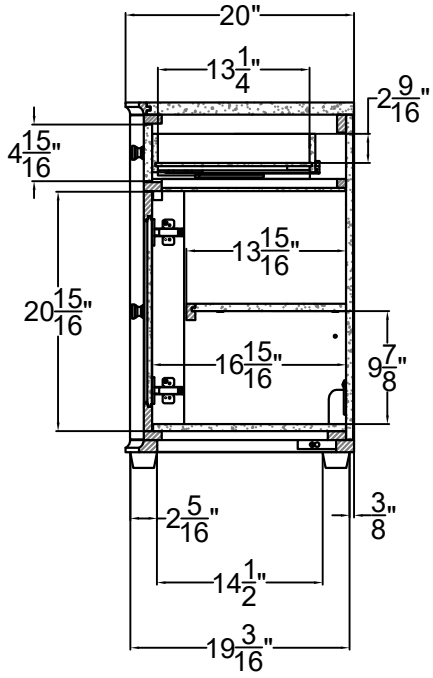

Due to the handcraed nature of our product, variations to plus or minus 1" of our listed measurements could occur. Specifications are subject to change without notice.