DETAILED DIMENSIONS

8003-CS SEQUOIA CHAIRSIDE TABLE

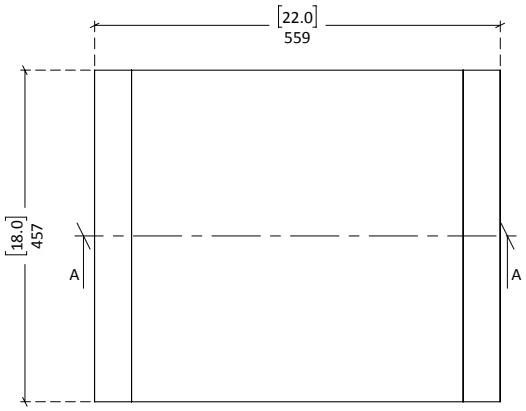

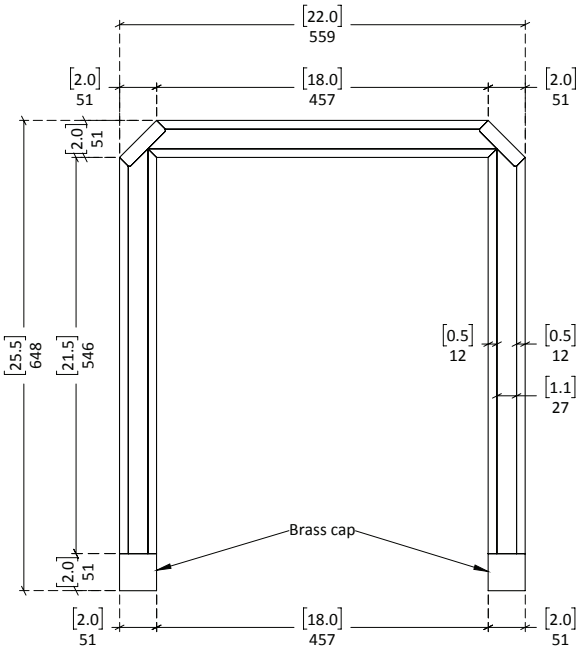

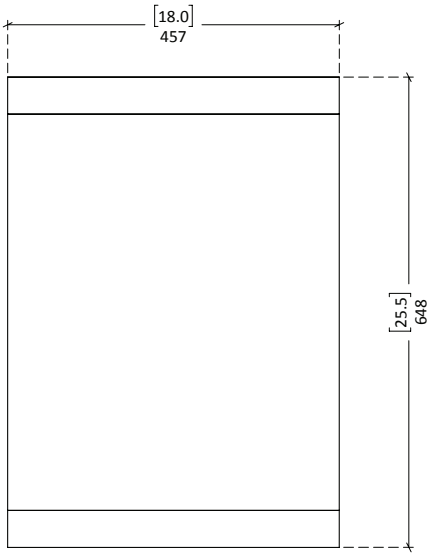

Dimensions:
Width 22" x Depth 18" x Height 25.5"

Finish: Natural

Material:
- Wood
- MDF
- Burl Veneer
- Brass