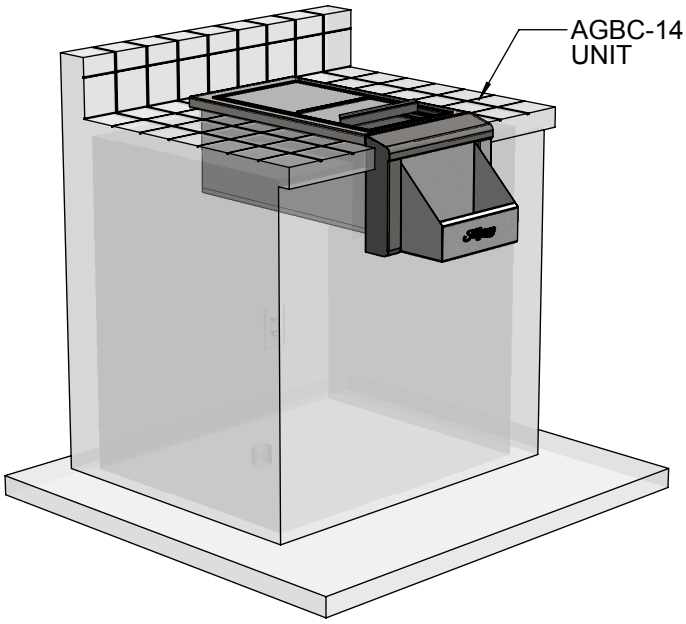

AGBC-14 TYPICAL INSTALLATION

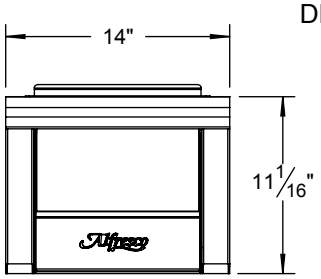

FRONT VIEW

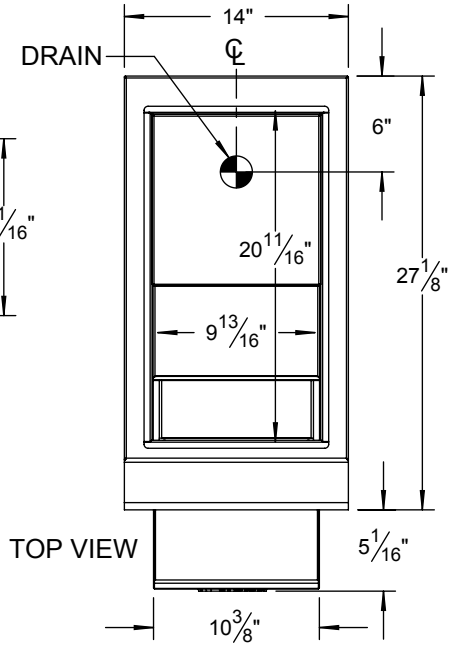

TOP VIEW

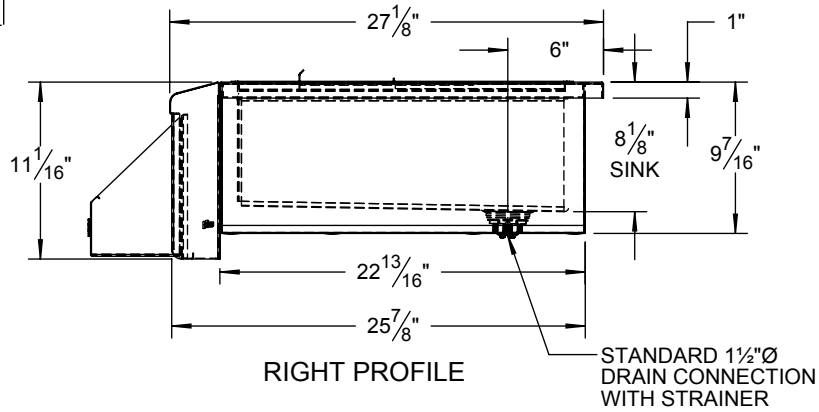

RIGHT PROFILE

COUNTERTOP CUTOUT REQUIREMENTS

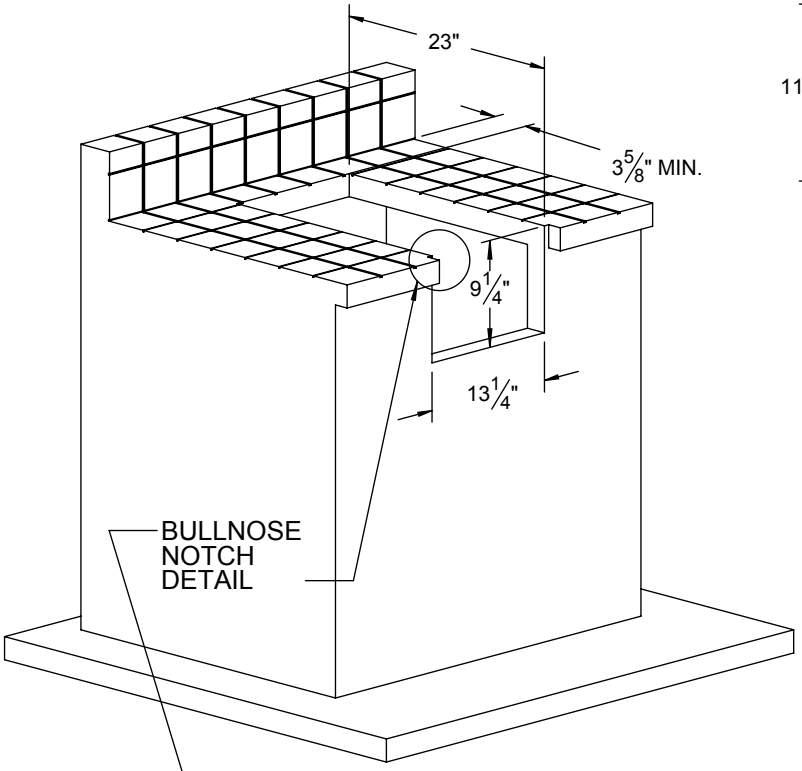

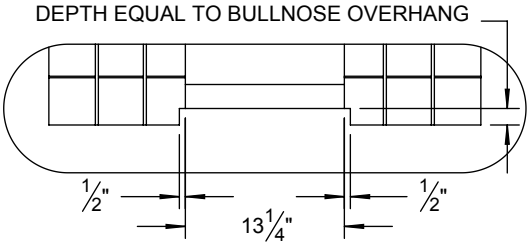

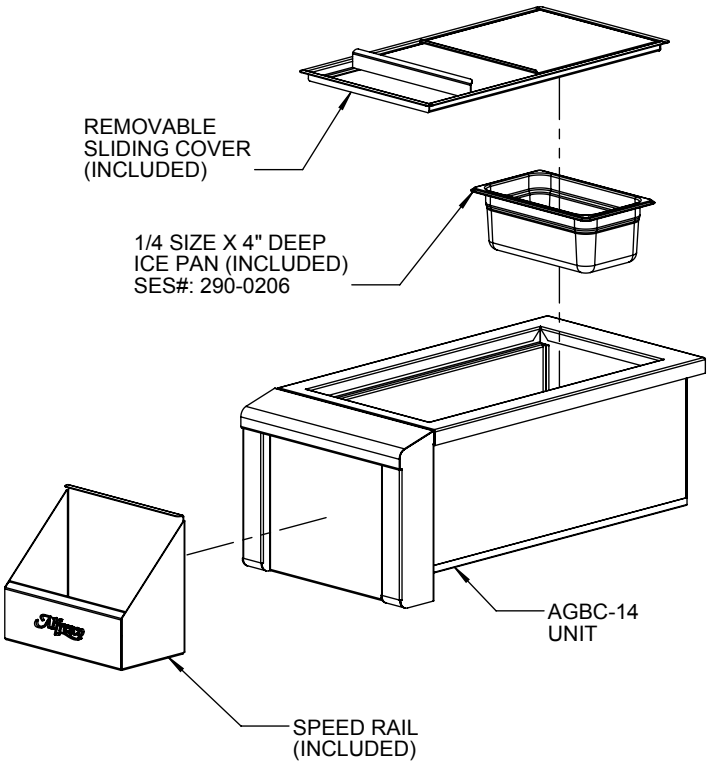

NOTES:

- A DRAIN MUST BE PROVIDED INSIDE THE COUNTER FOR PROPER AGBC-14 INSTALLATION.

Alfresco™ SUPERIOR EQUIPMENT SOLUTIONS 7039 EAST SLAUSON AVENUE COMMERCE, CA. 90040	THE INFORMATION CONTAINED IN THIS DRAWING IS THE SOLE PROPERTY OF SUPERIOR EQUIPMENT SOLUTIONS INC. ANY REPRODUCTION IN PART OR AS A WHOLE WITHOUT WRITTEN PERMISSION FROM SUPERIOR EQUIPMENT SOLUTIONS, INC. IS PROHIBITED.	PROJECT TITLE: **AGBC-14 UNIT**	DRAWING NO.: **AGBC-14 SPEC SHEET**
			SHEET 1 OF 1
	DRAWN BY: ADRIAN CRISCI **CREATED:** 11/22/2011 2:09:25 PM	DRAWING TITLE: **BARTENDING BEVERAGE CENTER SPECIFICATIONS**	