28″ INSERT RANGE HOOD

FITS 30 IN. COOKTOPS ·

INDUCTION HARDWARE

INSTALLATION DRAWING · MOUNTING SHEET

28″ Range Hood Insert — RH-INSERT-28

INCHES [MM]

Insert for a custom enclosure · ducted · brushless DC · 120V

1 · FRONT ELEVATION

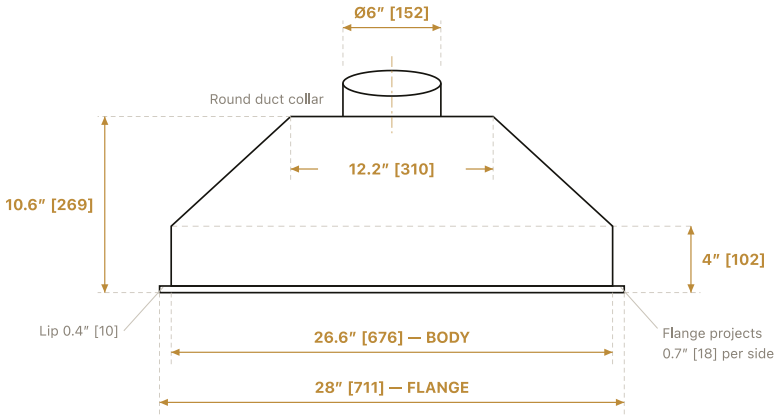

2 · SIDE ELEVATION

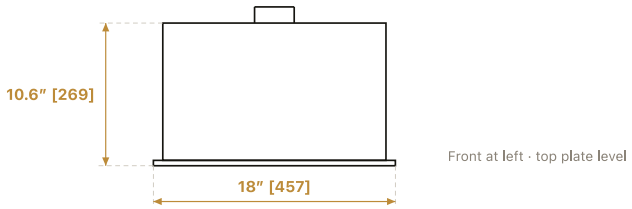

3 · TOP PLAN — COLLAR LOCATION

Top plate 12.2″ [310] × 16.6″ [422] — dashed

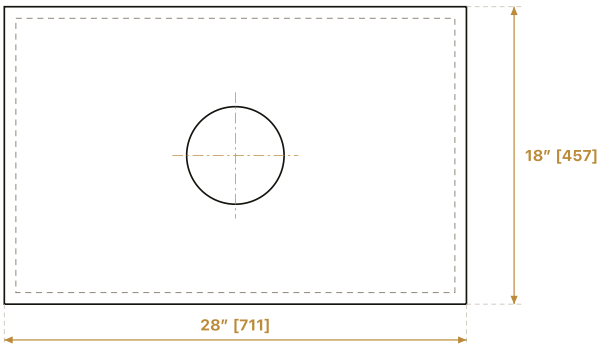

Cutout A × B = 26.8″ [681] × 16.8″ [427] · lower body 26.6″ × 16.6″ · flange 28″ × 18″

Brackets: front & rear 0.4–3.9″ [10–100] · side 0.4–2.6″ [10–65] · min. drop below lip 0.4″ [10]

Suits a 30″ cooking surface · duct Ø6″ round · 400 CFM max · 120V AC · verify on site before cutting

DEPTH PLAN & BOTTOM VIEW DRAWING PENDING · TOP-DECK WIDTH TO CONFIRM

Mounting-sheet flange dimensions await a correction pass — verify against the unit before fabrication.



SPECIFICATIONS

SKU	**RH-INSERT-28**
Overall W × D × H	**27.95 × 18 × 13 in**
Cutout A × B	**26.8 × 16.8 in**
Maximum airflow	**400 CFM**
Blower motor	**Brushless DC**
Work lights	**2 × LED**
Duct collar	**Ø5.9 in round**
Venting	**Ducted**
Product weight	**25 lbs**
Package W × D × H	**32 × 22 × 17 in**
Power	**120V · NEMA 5-15P**
Certification	**ETL**

Clearance — 26 in. minimum from the cooking-vessel surface to the lowest part of the hood; 30 in. minimum above a gas cooking surface.

Bracket travel: front & rear 0.4–3.9 in · side 0.4–2.6 in. Set to match enclosure material thickness.

34″ INSERT RANGE HOOD

FITS 36 IN. COOKTOPS ·

INDUCTION HARDWARE

INSTALLATION DRAWING · MOUNTING SHEET

34″ Range Hood Insert — RH-INSERT-34

INCHES [MM]

Insert for a custom enclosure · ducted · brushless DC · 120V

1 · FRONT ELEVATION

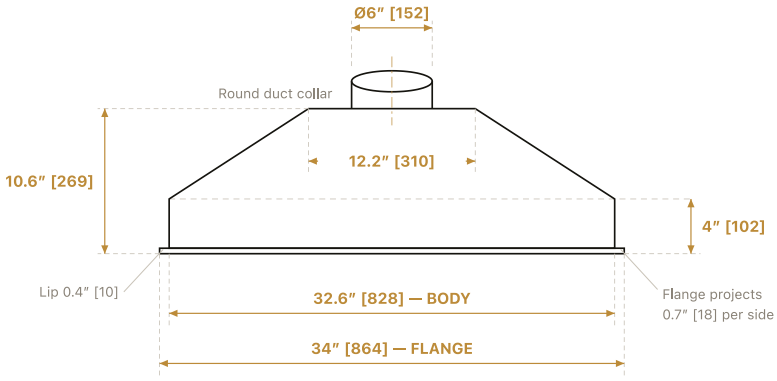

2 · SIDE ELEVATION

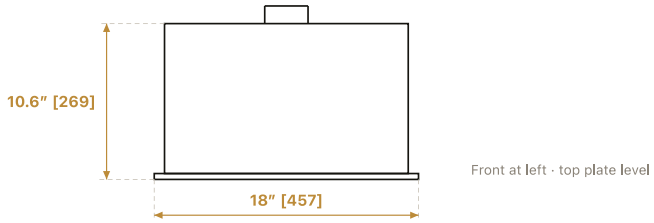

3 · TOP PLAN — COLLAR LOCATION

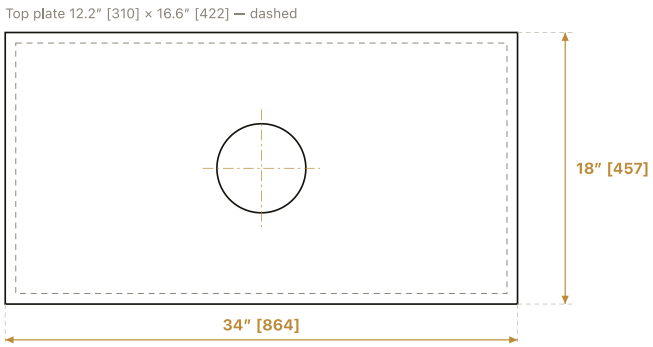

Cutout A × B = 32.8″ [833] × 16.8″ [427] · lower body 32.6″ × 16.6″ · flange 34″ × 18″

Brackets: front & rear 0.4–3.9″ [10–100] · side 0.4–2.6″ [10–65] · min. drop below lip 0.4″ [10]

Suits a 36″ cooking surface · duct Ø6″ round · 400 CFM max · 120V AC · verify on site before cutting

DEPTH PLAN & BOTTOM VIEW DRAWING PENDING · TOP-DECK WIDTH TO CONFIRM

Mounting-sheet flange dimensions await a correction pass — verify against the unit before fabrication.



SPECIFICATIONS

SKU	**RH-INSERT-34**
Overall W × D × H	**33.86 × 18 × 13 in**
Cutout A × B	**32.8 × 16.8 in**
Maximum airflow	**400 CFM**
Blower motor	**Brushless DC**
Work lights	**2 × LED**
Duct collar	**Ø5.9 in round**
Venting	**Ducted**
Product weight	**45 lbs**
Package W × D × H	**36 × 22 × 17 in**
Power	**120V · NEMA 5-15P**
Certification	**ETL**

Clearance — 26 in. minimum from the cooking-vessel surface to the lowest part of the hood; 30 in. minimum above a gas cooking surface.

Bracket travel: front & rear 0.4–3.9 in · side 0.4–2.6 in. Set to match enclosure material thickness.

46″ INSERT RANGE HOOD

FITS 48 IN. COOKTOPS ·

INDUCTION HARDWARE

INSTALLATION DRAWING · MOUNTING SHEET

46″ Range Hood Insert — RH-INSERT-46

INCHES [MM]

Insert for a custom enclosure · ducted · brushless DC · 120V

1 · FRONT ELEVATION

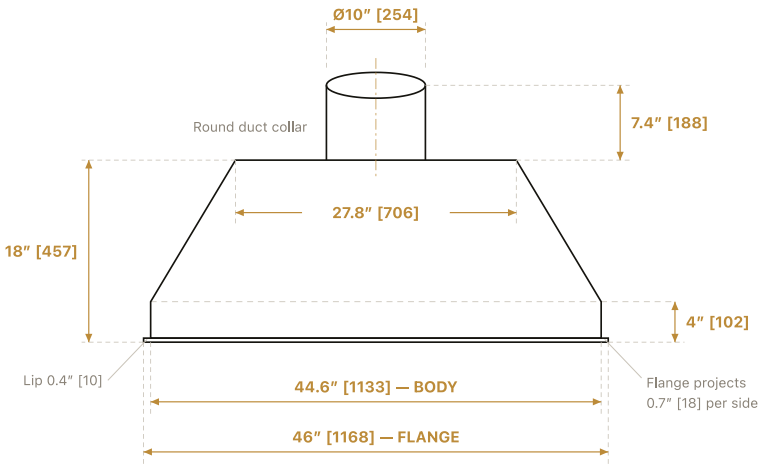

2 · SIDE ELEVATION

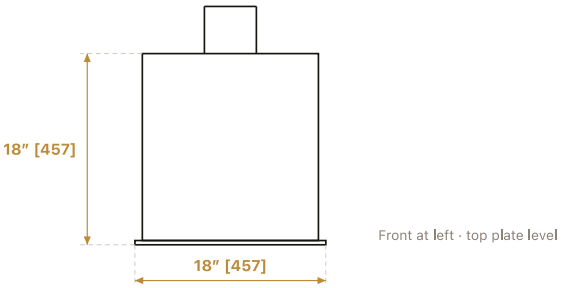

3 · TOP PLAN — COLLAR LOCATION

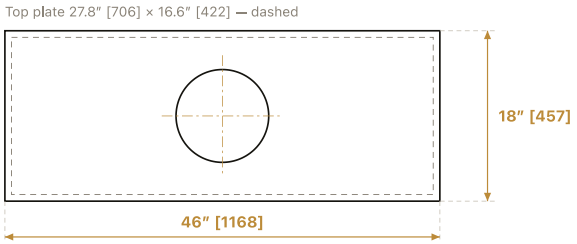

Cutout A × B = 44.8″ [1138] × 16.8″ [427] · lower body 44.6″ × 16.6″ · flange 46″ × 18″

Brackets: front & rear 0.4–3.9″ [10–100] · side 0.4–2.6″ [10–65] · min. drop below lip 0.4″ [10]

Suits a 48″ cooking surface · duct Ø10″ round · 1500 CFM max · 120V, 6.7A AC · verify on site before cutting

DEPTH PLAN & BOTTOM VIEW DRAWING PENDING

Mounting-sheet flange dimensions await a correction pass — verify against the unit before fabrication.



SPECIFICATIONS

SKU	**RH-INSERT-46**
Overall W × D × H	**45.7 × 18 × 18 in**
Cutout A × B	**44.8 × 16.8 in**
Maximum airflow	**1,500 CFM**
Blower motor	**Brushless DC**
Work lights	**2 × LED**
Duct collar	**Ø9.8 in round**
Venting	**Ducted**
Product weight	**60 lbs**
Package W × D × H	**50 × 22 × 22 in**
Power	**120V · NEMA 5-15P**
Certification	**ETL**

Clearance — 26 in. minimum from the cooking-vessel surface to the lowest part of the hood; 30 in. minimum above a gas cooking surface.

Bracket travel: front & rear 0.4–3.9 in · side 0.4–2.6 in. Set to match enclosure material thickness.

58″ INSERT RANGE HOOD

FITS 60 IN. COOKTOPS ·

INDUCTION HARDWARE

INSTALLATION DRAWING · MOUNTING SHEET

58″ Range Hood Insert — RH-INSERT-58

INCHES [MM]

Insert for a custom enclosure · ducted · brushless DC · 120V

1 · FRONT ELEVATION

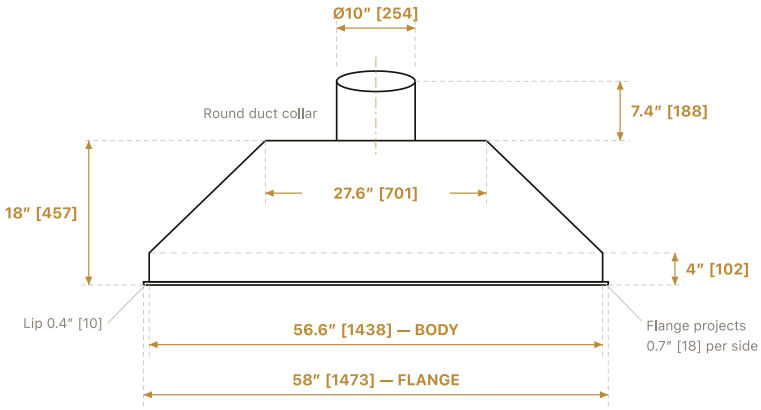

2 · SIDE ELEVATION

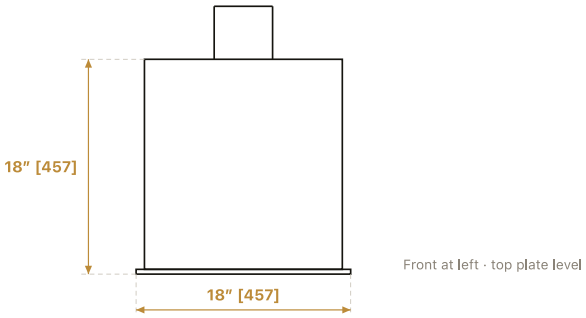

3 · TOP PLAN — COLLAR LOCATION

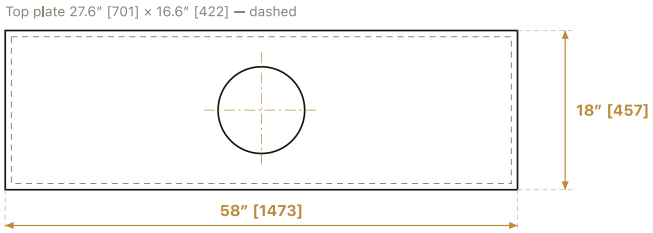

Cutout A × B = 56.8″ [1443] × 16.8″ [427] · lower body 56.6″ × 16.6″ · flange 58″ × 18″

Brackets: front & rear 0.4–3.9″ [10–100] · side 0.4–2.6″ [10–65] · min. drop below lip 0.4″ [10]

Suits a 60″ cooking surface · duct Ø10″ round · 1500 CFM max · 120V, 6.7A AC · verify on site before cutting

DEPTH PLAN & BOTTOM VIEW DRAWING PENDING · TOP-DECK WIDTH TO CONFIRM

Mounting-sheet flange dimensions await a correction pass — verify against the unit before fabrication.



SPECIFICATIONS

SKU	**RH-INSERT-58**
Overall W × D × H	**57.5 × 18 × 18 in**
Cutout A × B	**56.8 × 16.8 in**
Maximum airflow	**1,500 CFM**
Blower motor	**Brushless DC**
Work lights	**3 × LED**
Duct collar	**Ø9.8 in round**
Venting	**Ducted**
Product weight	**77 lbs**
Package W × D × H	**62 × 22 × 22 in**
Power	**120V · NEMA 5-15P**
Certification	**ETL**

Clearance — 26 in. minimum from the cooking-vessel surface to the lowest part of the hood; 30 in. minimum above a gas cooking surface.

Bracket travel: front & rear 0.4–3.9 in · side 0.4–2.6 in. Set to match enclosure material thickness.

VENTILATION · INSERTS

INSERT RANGE HOOD

RH-INSERT-28 · 34 · 46 · 58

PRODUCT SPECIFICATIONS — ALL MODELS

MODEL	OVERALL W × D × H	MAX CFM	WEIGHT	DUCT	FITS	PACKAGE
RH-INSERT-28	27.95 × 18 × 13 in	**400**	**25 lbs**	**Ø5.9 in**	**30 in.**	**32 × 22 × 17 in**
RH-INSERT-34	33.86 × 18 × 13 in	**400**	**45 lbs**	**Ø5.9 in**	**36 in.**	**36 × 22 × 17 in**
RH-INSERT-46	45.7 × 18 × 18 in	**1,500**	**60 lbs**	**Ø9.8 in**	**48 in.**	**50 × 22 × 22 in**
RH-INSERT-58	57.5 × 18 × 18 in	**1,500**	**77 lbs**	**Ø9.8 in**	**60 in.**	**62 × 22 × 22 in**

All models: 120V · NEMA 5-15P · brushless DC blower · 2× LED work lights (3× on the 58″) · insert mount, ducted · ETL certified · remote with LED display. Dimensions pulled live from inductionhardware.com; airflow per the Care & Install Guide. Weights and dimensions are approximate; Induction Hardware reserves the right to change specifications without prior notice.

Remote included	**DC** BRUSHLESS MOTOR	**LED** WORK LIGHTS	**Lifetime** WARRANTY

CUTOUT DIMENSIONS — ALL MODELS

MODEL	A (LENGTH)	B (WIDTH)
RH-INSERT-28	**26.8 in**	**16.8 in**
RH-INSERT-34	**32.8 in**	**16.8 in**
RH-INSERT-46	**44.8 in**	**16.8 in**
RH-INSERT-58	**56.8 in**	**16.8 in**

BRACKET HEIGHT ADJUSTMENT

BRACKET POSITION	MIN	MAX
Front & rear	**0.4 in**	**3.9 in**
Side	**0.4 in**	**2.6 in**

Common to all four widths. Cord and NEMA 5-15P plug pre-installed; provide a 120V grounded outlet inside the enclosure.

Clearance — Minimum **26 in.** between the supporting surface for cooking vessels and the lowest part of the range hood. Use **30 in. minimum** if mounted above a gas cooking surface.

THE LINE — ONE INSERT PER COOKTOP WIDTH



RH-INSERT-28
28″ · fits 30″



RH-INSERT-34
34″ · fits 36″



RH-INSERT-46
46″ · fits 48″



RH-INSERT-58
58″ · fits 60″

Dimensioned mounting drawings for each model follow on pages 2–5. Full install sequence, bracket travel, and venting are in the Care & Install Guide, §07, pp. 14–17.