INDUCTION HARDWARE

CARE & INSTALL GUIDE
V3 · NOVEMBER 2026

REFRIGERATION · COLUMN

REFRIGERATOR, FREEZER & WINE COLUMNS

18″ · 24″ · 30″ — one column platform, three cabin types

RFC · FRC · RFC-W — SS / BS / PANEL READY / VEGA / ORION



SHOWROOM

INDUCTIONHARDWARE.COM
12920 OLD VIRGINIA ROAD, SUITE 160
RENO, NEVADA 89521

SUPPORT

(775) 898-7562 · MON–FRI 9–4 PST
INFO@INDUCTIONHARDWARE.COM

RECORD HERE

MODEL & SERIAL

What's in this **guide.**

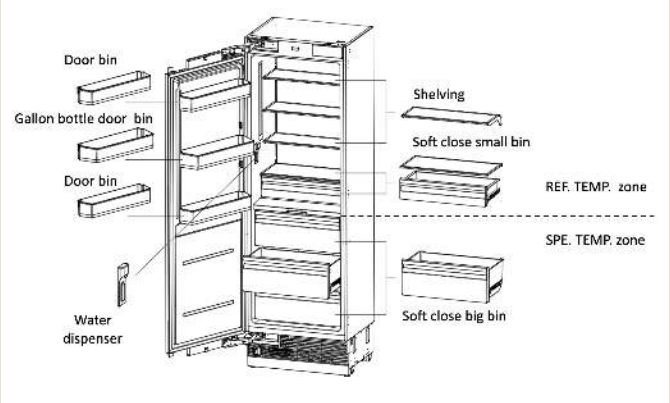

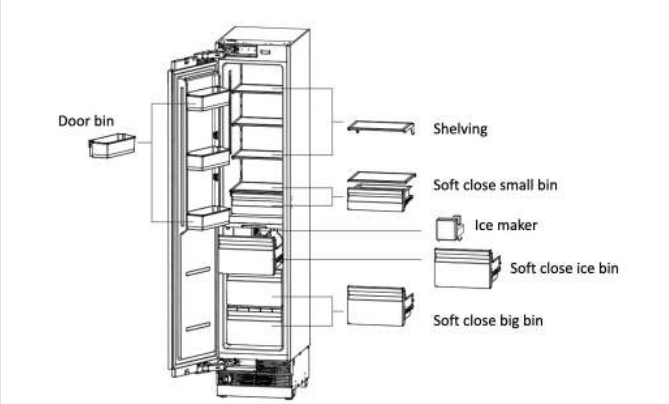

TABLE OF CONTENTS

Safety Warnings	3
Electrical Connection & Refrigerant	4
Freezer Column Features	5
Freezer Control Panel	6
Refrigerator Column Features	8
Refrigerator Control Panel	9
Wine Column Features & Storage	11
Wine Column Control Panel	12
Before First Use	13
Specifications	14
Installation Guide	15
Placement, Door Load & Tools	16
Electrical & Water Location	17
Cabin Dimensions & Levelness	18
Product & Install Dimensions	19
Unpacking & Mounting Parts	21
Anti-Tip Brackets	22
Water Line & Power Socket	23
Placing the Column	24
Height & Panel Adjustment	25
Brackets, Cabin Bottom & Trim	26
Custom Panel Preparation	27
Custom Panel Installation	28
Wine Column Panel & Mounting	29
Wine Column Assembly Sequence	30
Wine Column Panel & Racks	31
Reversing the Door Swing	32
Dual Cabin Installation	33
Care & Cleaning	34
Troubleshooting	35
Warranty & Service	36
For Your Records & Contact	37

Read and obey every **safety message.**

INDUCTION HARDWARE

SAFETY ALERT SYMBOL

The safety alert symbol alerts you to potential hazards that can cause severe bodily injury or death. All safety messages follow this symbol and either the word **DANGER**, **WARNING** or **CAUTION**.

GENERAL USE

Use this appliance only as described in this manual. Other uses may cause fire, electric shock or personal injury.

This appliance is not intended for use by young children or infirm persons unless adequately supervised.

Young children should be supervised to ensure they never play with the appliance.

To protect against electric shock, never immerse the unit, cord or plug in water, or spray it with any liquid.

Unplug the appliance when not in use, when moving it, and before cleaning. Grip the plug — never pull by the cord.

Never operate near explosive or flammable fumes, an open flame, or another heating appliance.

Never operate the appliance with a damaged cord, plug or circuit.

Use two or more people to move and install the column. Failure to do so can result in back or other injury.

PLACEMENT

Place the appliance on a floor strong enough to support it fully loaded. Level it using the four adjustable legs.

Locate the appliance away from direct sunlight and heat sources. Extreme cold may also prevent proper operation.

Never place the unit in damp areas.

Plug the appliance into an exclusive, easily accessible electrical socket.

The air vent at the front must never be covered or blocked in any way.

Install in a well-ventilated area where the ambient temperature is above 50°F and below 90°F.

All electrical connections must comply with state and local codes.

ATTENTION

Never overload the cabinet, and never open the door unless necessary.

Never cover shelves with aluminium foil or other material that prevents air circulation.

If the appliance is left empty for long periods, unplug it and — after careful cleaning — leave the door ajar so air can circulate, to avoid condensation, mould or odours.

DOOR SWING

The door can be opened from either the left or the right side. The unit is delivered with the door opening on the left. To change it, follow “Reversing the Door Swing” on page 32. **Exception — 18″ freezer column (FRC-18):** the door opens from the right only, with the hinges on the left, and cannot be reversed.

Electrical connection and **refrigerant.**

GROUNDING

Check that the voltage marked on the product corresponds with your supply voltage. This appliance must be properly grounded for your safety.

The power cord is equipped with a three-pin plug that mates with standard three-pin wall outlets. Never cut or remove the third ground prong. Have the wall outlet and circuit checked by a qualified electrician to make sure the outlet is properly grounded. Where a two-pin outlet is encountered, it is your responsibility to have it replaced with a properly grounded three-pin outlet.

To prevent accidental injury, secure the cord behind the appliance rather than leaving it exposed or dangling. Always plug the appliance into its own individual outlet whose voltage rating matches the rating label. Repair or replace immediately any cord that is frayed, cracked or abraded.

RISK OF ELECTRIC SHOCK

Do not remove the round grounding terminal. Do not use two-pin grounding adaptors. Do not use extension cables to energize the product. Do not connect the grounding cable to a gas pipe. Do not install a fuse on the neutral line or grounding circuit.

SUPPLY

Supply	**120 V · 60 Hz**
Fuse	**15 A**
Plug	**NEMA 5-15P, 3-pin**
Refrigerant	**R600a (isobutane)**
Settling time before power-up	**3–6 hours**

FLAMMABLE REFRIGERANT

This appliance is CFC and HFC free and contains a small quantity of isobutane (R600a), an environmentally friendly coolant. **Caution — risk of fire or explosion due to puncture of refrigerant tubing.** Ensure the cooling circuit is undamaged when installing. If it becomes damaged, avoid proximity to open fires and heat sources of all kinds, and ventilate the room according to state and local codes.

EXTENSION CORDS

Never use an extension cord unless it has been checked and tested by a qualified technician. It must be a UL/cUL listed, 3-wire grounding extension cord rated 115 volts and at least 10 amperes.

LIABILITY

Ensure the ventilation openings to and from a built-in appliance are never blocked. No liability is accepted for damage caused by misuse, or by repairs carried out by an unqualified person — in that case neither the warranty nor any other liability claim applies.

Freezer column **features.**

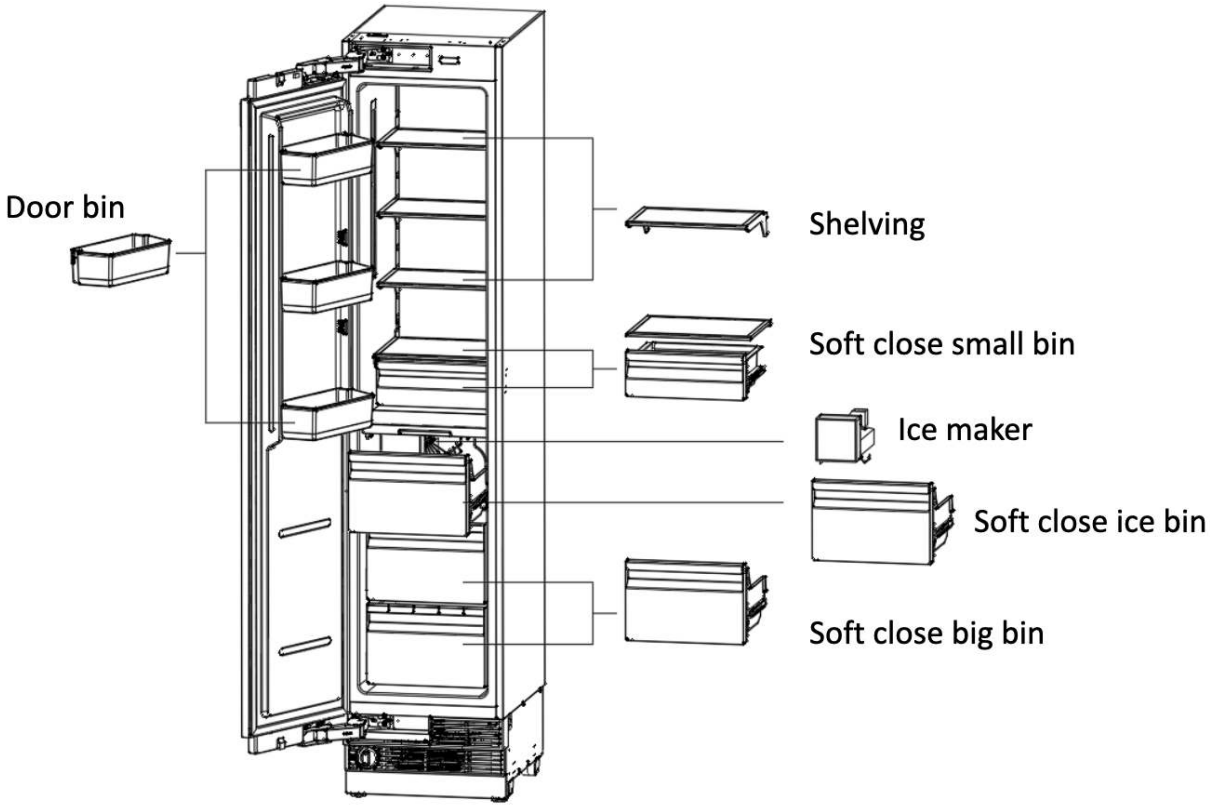

FREEZER COMPONENTS

Shelving	Selectable shelf heights. Heat-treated safety glass.
Ice maker (if applicable)	Removable ice container. Hygienic ice scoop.
Soft-close bins	Freezer bins self-close to ensure all bins close properly.
Door bins	Adjustable and removable door bins.

NOTE

18″ freezer column (FRC-18): the door opens from the right only, with the hinges on the left. The door swing cannot be reversed. Recommended operating temperature for the freezer is 0°F (−18°C). Figures in this manual are schematic and may not match the product exactly; if your product does not have the relevant parts, the information applies to other models.

Freezer **control panel.**

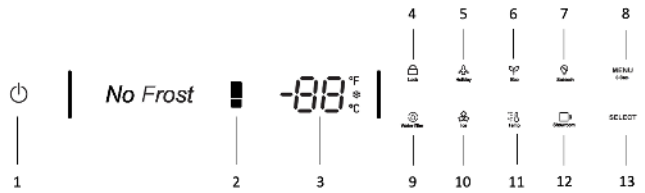

1. On/Off Button	Switches the whole appliance on and off. Press to switch on — the product powers up in 5 seconds. Press and hold for 1.5 seconds to switch off.
2. Temp. Display	Displays the set temperature of the freezer. Fahrenheit, Celsius and super freezer lamps illuminate.
3. Select	After selecting a menu item, press SELECT to confirm the function.
4. Temp. Unit	Press MENU until the Celsius / Fahrenheit symbol illuminates to change units, then press SELECT to confirm.
5. Showroom Mode	For use in display models. Do not store any food while in showroom mode, as the appliance remains at room temperature.
6. Eco Mode	Press MENU until Eco Mode illuminates, then SELECT to enable. Freezer temperature is set to 7°F (−14°C) automatically.
7. Sabbath Mode	Press MENU until the Sabbath symbol illuminates, then SELECT to enable. All lights, buzzers and display panels switch off.
8. Menu / Child Lock	Press MENU for 3 seconds to lock or unlock the control panel. Child lock prevents children from changing the product settings.
9. Water Filter	The water filter symbol flashes and beeps to advise replacement. After replacing, press SELECT for 5 seconds to reset. The set replacement interval is 130 days.
10. Ice Maker	Press MENU until the ice making symbol illuminates, then SELECT to enable. Ice cubes accumulate in the ice tray. After connecting the freezer to a water source, or after replacing the water filter, fill and discard two full containers of ice.

Freezer control panel — **continued.**

11. Lock	Press and hold the lock key for 3 seconds and the lock icon lights up. Press again for 3 seconds to unlock. The panel locks automatically after 3 minutes without key operation. All following operations must be performed in the unlocked state.
12. Holiday Mode	Press MENU until the holiday symbol illuminates, then SELECT to enable. Freezer temperature is set to 0°F (–18°C) automatically. Before leaving, turn the ice maker off on the control panel and shut off the water supply. On return, turn the ice maker on and discard the first full bin of ice.
13. Colder / Warmer	Changes the freezer compartment temperature from 7°F (–14°C) to –11°F (–24°C). After regulation stops, the display flashes for 5 seconds and takes effect. Super freezing is enabled by continuing to press past –11°F (–24°C); the snow symbol illuminates. Super freezing assists with periods of high freezer use, full grocery loads, or temporarily warm room temperatures. After the cycle completes the appliance returns to its previous setting.

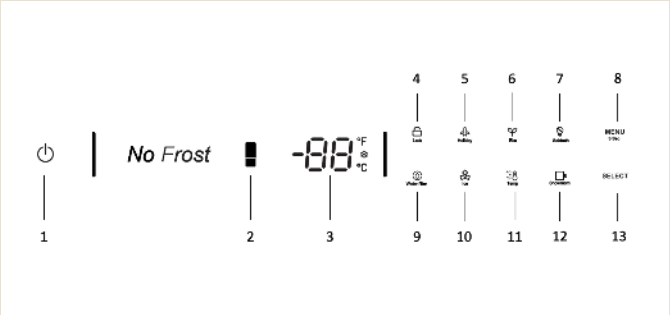

RECOMMENDED SETTING

Hold the freezer at **0°F (–18°C)** for normal use. Use super freezing only when loading a large quantity of unfrozen food, and let the appliance return to its previous setting afterwards.

NOTE

Icons shown on the panel vary by model. Water filter and ice maker controls appear only on columns plumbed to a water supply.

Refrigerator column **features.**

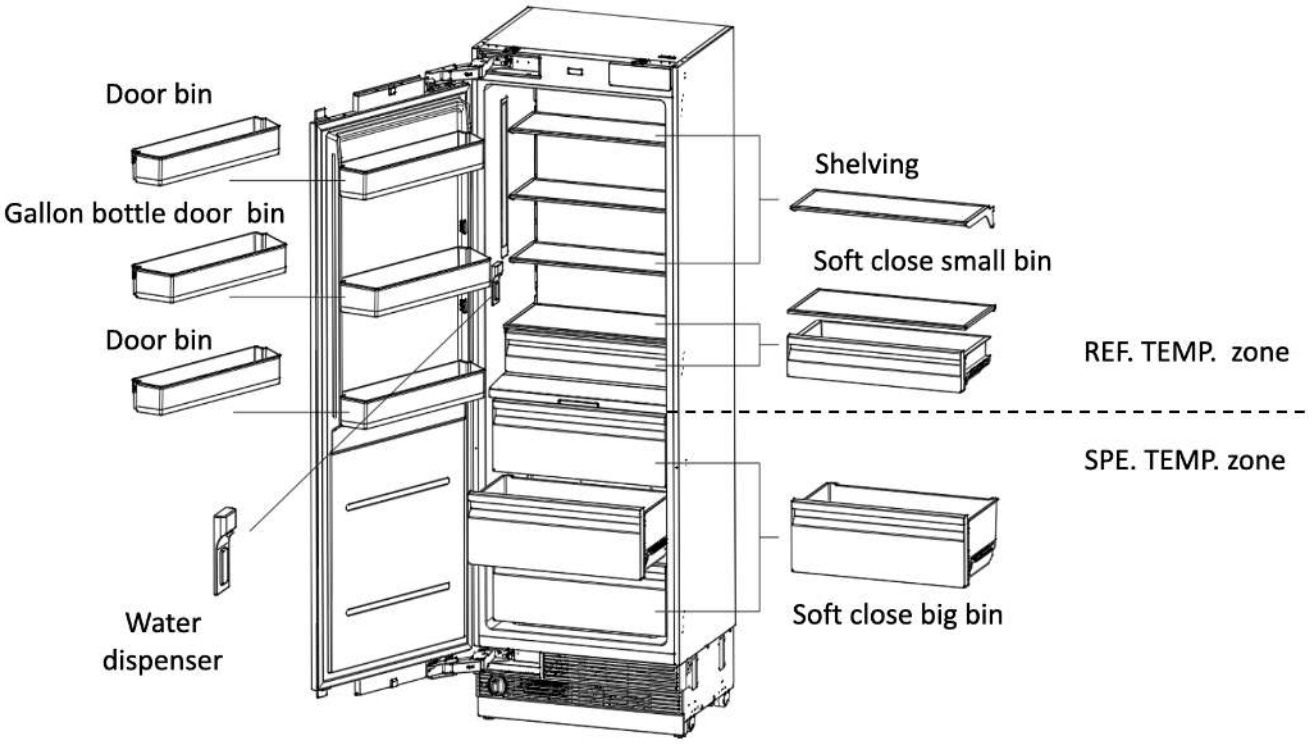

REFRIGERATOR COMPONENTS

Shelving	Selectable shelf heights. Heat-treated safety glass.
Water dispenser (if applicable)	Removable ice container. Hygienic ice scoop.
Soft-close bins	Soft-close bins ensure bins close quietly and properly.
Door bins	Adjustable and removable door bins. Gallon bottle door bins.

NOTE

Recommended operating temperatures: REF. TEMP. 39°F (4°C), SPE. TEMP. 34°F (1°C). Figures in this manual are schematic and may not match the product exactly.

Refrigerator **control panel.**

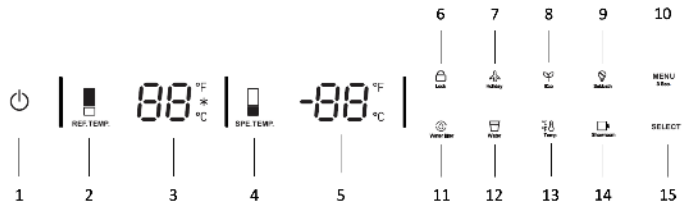

1. On/Off Button	Switches the whole appliance on and off. Press to switch on — the product powers up in 5 seconds. Press and hold for 1.5 seconds to switch off.
2. Temp. Display	Displays the set temperature of the REF. TEMP. zone. Fahrenheit, Celsius and super cooling lamps illuminate.
3. Eco Mode	Press MENU until Eco Mode illuminates, then SELECT to enable. REF. TEMP. is set to 46°F (8°C) and SPE. TEMP. to 41°F (5°C) automatically.
4. SPE. TEMP. zone	Press the SPE. TEMP. button to adjust from 30°F (−1°C) to 41°F (5°C). After regulation stops, the display flashes for 5 seconds and takes effect.
5. Temp. display	Displays the set temperature of the SPE. TEMP. zone. Fahrenheit and Celsius lamps illuminate.
6. Menu / Child Lock	Press MENU for 3 seconds to lock or unlock the control panel. Child lock prevents children from changing the product settings.
7. Water filter	The water filter symbol flashes and beeps to advise replacement. After replacing, press SELECT for 5 seconds to reset. The set replacement interval is 130 days.
8. Sabbath Mode	Press MENU until the Sabbath symbol illuminates, then SELECT to enable. All lights, buzzers and display panels switch off.
9. Lock	Press and hold the lock key for 3 seconds and the lock icon lights up. Press again for 3 seconds to unlock. The panel locks automatically after 3 minutes without key operation.

Refrigerator control panel — **continued.**

10. Holiday Mode	Press MENU until the holiday symbol illuminates, then SELECT to enable. REF. TEMP. and SPE. TEMP. are set to 63°F (17°C) automatically. Do not place food in the fresh food compartment when Holiday Mode is enabled.
11. REF. TEMP. zone	Press the REF. TEMP. button to adjust from 36°F (2°C) to 46°F (8°C). Super cooling is enabled by continuing to press past 36°F (2°C); the snow symbol illuminates. Super cooling assists with high refrigerator use, full grocery loads, or temporarily warm room temperatures, then returns to the previous setting.
12. Water dispenser	Press MENU until the water dispenser symbol illuminates, then SELECT to enable. Fresh water is provided from the dispenser fitted on the internal wall. Prepare the water filter before use. After connecting to a water source or replacing the filter, fill and discard two full containers.
13. Temperature unit	Press MENU until the Celsius / Fahrenheit symbol illuminates to change units, then press SELECT to confirm.
14. Showroom Mode	Press MENU until the showroom symbol illuminates, then SELECT to enable. Used when the refrigerator is on display in a retail store, or to turn cooling off and deactivate all functions except interior lighting. Do not store food while in showroom mode.
15. Select	After selecting a menu item, press SELECT to confirm the function.

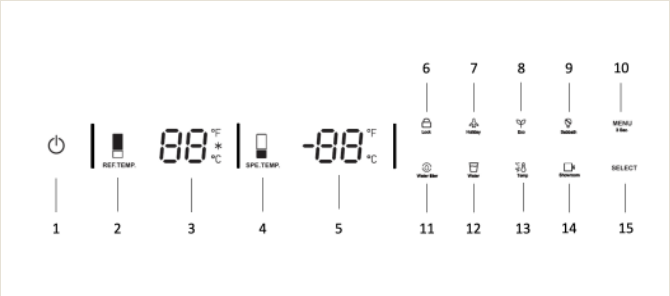

RECOMMENDED SETTINGS

REF. TEMP.	**39°F (4°C)**
SPE. TEMP.	**34°F (1°C)**

24″ wine column — **features and storage.**

RFC-W-24 is a three-zone wine column on the same 84″ cabin platform as the refrigerator and freezer columns, so it lines up flush in a continuous run. Eleven beech glide racks hold up to 100 bottles across three independently set zones, each adjustable from 41°F to 68°F.

PARTS IDENTIFICATION

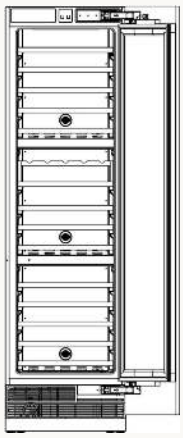

01 Wine Shelf A	Full-depth glide rack for standard 750 ml Bordeaux bottles.
02 Control panel	Three-zone touch panel — see the following page.
03 Wine Shelf B	Display rack, bottles presented at an angle. Lower count per shelf.
Door switch	Electromagnetic switch lights the cabin and stops the fan on opening.
Carbon filter	Rear-panel filter, turns counterclockwise to unlock. Replace every 3–6 months.

REMOVING A WOODEN RACK

1. Pull the rack until the card slot clears the fixed column on the guide rail.
2. Continue forward until the guide retaining post reaches its stop.
3. Lift and pull the rack clear. Empty the rack before removing it.

PRODUCT SPECIFICATION — RFC-W-24

Voltage / frequency	**115 V · 60 Hz**
Amperage	**1.5 A**
Refrigerant	**R600a**
Temperature range, each zone	**41–68°F (5–20°C)**
Overall H × W × D	**83 9/16 × 23 3/4 × 23 1/2″**
Storage capacity	**100 bottles · 94 mixed**

BOTTLE COUNT BY ZONE

Zone	Racks	Shelf A only	Mixed A + B
Upper	5	35	28 + 5
Middle	4	30	20 + 8
Lower	5	35	28 + 5
Total	11	**100**	**76 + 18**

Counts are based on standard 750 ml Bordeaux-style bottles. Shelf B presents bottles for display and holds fewer per rack.

INSTALLATION DIMENSIONS — RFC-W-24

Cabin opening 24″ W × 84″ H (min. 83 3/4″, max. 85 5/16″) × 25″ D. Custom panel 23 3/4″ W. Anti-tip brackets set 24″ apart, 17 5/8″ from the side and 3 3/16″ down. Door swing clearance 26″ at 115°, 14″ at 90°. If the custom panel is thicker than 1 1/2″ (38 mm) the door must not open past 90° — fit the 90° limit pins to the upper and lower hinges, fully seated, or the door will not close properly.

Wine column **control panel.**

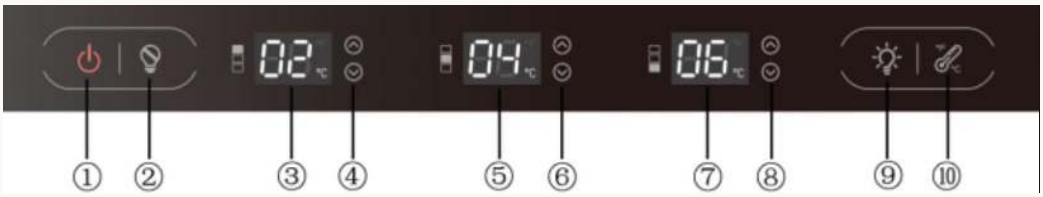

1. Power On/Off	Press and hold for 3 seconds to switch the column on or off. Switching off cuts power to all peripherals and enters standby.
2. Sabbath Mode	Short press to enter or exit. Compressor and fan run normally; lighting, display and buzzer stay off. Exits automatically after 96 hours, and the setting survives a power failure.
3–4. Upper zone	Displays and sets the upper zone from 41°F to 68°F (5–20°C).
5–6. Middle zone	Displays and sets the middle zone from 41°F to 68°F (5–20°C).
7–8. Lower zone	Displays and sets the lower zone from 41°F to 68°F (5–20°C).
9. Light	Cabin lighting follows the door by default. Short press cycles amber, blue, white and off. Press and hold 3 seconds for permanent light — all three displays read ON for 5 seconds, and the zone keys then set brightness L1–L7. The last state is remembered.
10. Unit	Switches the temperature display between °C and °F.
Child lock	The panel is unlocked at power on. Press the two zone keys together to lock or unlock. While locked, any key press flashes all three zone temperatures for 3 seconds with a beep.
Showroom Mode	Hold the two zone keys for 3 seconds. Everything runs except the compressor and all three displays read Sn. Exits automatically after 72 hours, or repeat the key press. Do not store wine in showroom mode.
Door open	Opening the door lights the cabin and wakes the display; the fan stops. After 5 minutes open, a door alarm sounds — cancel it with any key. Closing the door restarts the fan and blanks the display after 30 seconds.

SUGGESTED SERVING TEMPERATURES

Sparkling — upper zone	**43–47°F**
White — middle zone	**45–54°F**
Red — lower zone	**57–64°F**
Long-term cellaring	**53–57°F**

Settings are held through a power failure and restored on power-up. After a change the display shows the current cabin temperature and moves gradually to the set point — this is normal and can take several hours.

FAULT CODES

Probe	Open	Short
Upper zone, in-cabinet	**E1**	**E2**
Upper zone, frosting	**E3**	**E4**
Middle zone, in-cabinet	**E5**	**E6**
Middle zone, frosting	**E7**	**E8**
Lower zone, in-cabinet	**E9**	**E10**
Lower zone, frosting	**E11**	**E12**

A fault code flashes on a 10-second cycle with three beeps. Silence the alarm with the on/off key and call for service — probe faults are not user-serviceable.

AFTER A POWER INTERRUPTION

Wait 3 to 5 minutes before restarting the column. Restarting sooner may leave the appliance unable to start and it will not hold the last set temperature. Some frost is normal on the coldest settings and in humid rooms; if frost stops the door sealing, switch the column off until it clears — up to 24 hours — and dry the cabin with a soft towel.

The first **six hours.**

START-UP

1. Make sure all preparations have been made in accordance with the safety and installation chapters of this manual.
2. Clean the interior as recommended in the care section, and make sure it is dry before starting.
3. Plug the appliance into a grounded socket. Interior illumination lights when the door is opened.
4. Operate the appliance for 6 hours without placing any food in it, and do not open the door unless necessary.

NORMAL SOUNDS AND WARMTH

You will hear a noise when the compressor starts up. Liquids and gases sealed within the refrigeration system may also give rise to noise even when the compressor is not running. This is normal.

Front edges of the appliance may feel warm. This is normal — these areas are designed to be warm to avoid condensation.

FOR BEST PERFORMANCE

Do not leave the doors open for a long time, and do not put hot food or drinks inside.

Do not overload the cabin. Cooling capacity falls when air circulation is hindered.

Do not place the appliance in direct sunlight. Install at least 30 cm from heat sources such as hobs, ovens, heaters and stoves, and at least 5 cm from electric ovens.

Store food in closed containers.

You can remove the drawer shelf of the freezer compartment to fill it with the maximum amount of food. The published energy consumption value was determined with the shelf or drawer removed.

Thawing frozen food in the refrigerator compartment both saves energy and preserves the quality of the food.

NOTES

Room temperature should be at least 50°F (10°C). If two coolers are installed side by side there should be at least 4 cm between them. Make sure food does not touch the temperature sensor in the fresh food compartment. Connecting the appliance to third-party energy-saving systems is dangerous and may damage the product.

One platform, three **cabins.**

INDUCTION HARDWARE

PUBLISHED MODEL DATA

Model	Overall W × D × H	Cutout W × D × H	Capacity	Temp. range	Weight
RFC-30 — 30″ refrigerator	29.75 × 25 × 83.38″	30 × 25 × 84″	16.6 cu ft	34–44°F	335 lb
RFC-24 — 24″ refrigerator	23.75 × 25 × 83.38″	24 × 25 × 84″	12.5 cu ft	34–44°F	324 lb
FRC-24 — 24″ freezer	23.75 × 25 × 83.38″	24 × 25 × 84″	12.4 cu ft	−11 to 7°F	311 lb
FRC-18 — 18″ freezer	17.75 × 25 × 83.38″	18 × 25 × 84″	8.6 cu ft	−11 to 7°F	262 lb
FRC-30 — 30″ freezer	29.75 × 25 × 83.38″	30 × 25 × 84″	16.5 cu ft	−11 to 7°F	330 lb
RFC-W-24 — 24″ wine, 3 zone	23.75 × 23.5 × 83.56″	24 × 25 × 84″	100 bottles	41–68°F	298 lb

SHARED ACROSS THE COLUMN LINE

Installation	**Built-in, flush**
Compressor	**Digital inverter**
Refrigerant	**R600a**
Power	**115–120 V · 15 A**
Plug	**NEMA 5-15P**
Water pressure	**25–80 psi**
Certification	**ETL**

FIVE FRONTS

Finished, or gone entirely.

Stainless and Signature Black Stainless ship finished. Panel Ready takes your own cabinet front. Vega adds gold to a stainless door, Orion to a black stainless one — internals are identical across all five.

WIDTHS BY CABIN TYPE

Refrigerator — RFC	**24″ · 30″**
Freezer — FRC	**18″ · 24″ · 30″**
Wine, three zone	**24″**

Installation made **clear.**

Proper installation ensures your Induction Hardware appliance performs exactly as designed. This section provides the key steps and requirements to help installers complete the process safely and correctly. For additional resources, installation videos, and the most up-to-date documentation, please visit our website.

INSTALLATION CONTENTS

Door Load Bearing Capacity	16
Placement of Installation	16
Tools Used for Install	16
Electrical Location — Single Cabin	17
Water Location — Single Cabin	17
Preparation & Cabin Dimensions	18
Levelness of Location	18
Product Dimensions	19
Install Dimensions	19
Unpacking	21
Mounting Parts List	21
Anti-Tip Bracket Mounting	22
Alternative Anti-Tip Brackets	22
Water Line and Power Socket	23
Placing the Column	24
Height Adjustment	25
Panel Adjustment	25
Upper and Lower Brackets	26
Installing the Cabin Bottom	26
Vent Hole & Decorative Parts	26
Custom Panel Preparation	27
Custom Cutout Dimensions	28
Wine Column Panel, Mounting & Assembly	29
Change Door Opening Direction	32
Dual Cabin Installation	33

Placement, door load and **tools.**

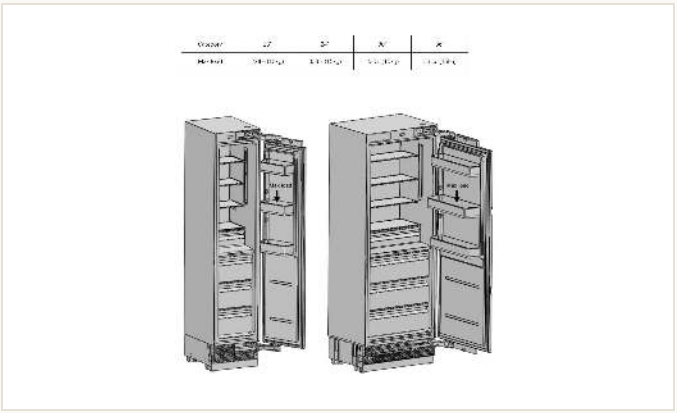

DOOR LOAD BEARING CAPACITY



TOOLS USED FOR INSTALLATION

INSTALLATION PLACE

The floor must be capable of bearing 1,200 pounds (544 kg) minimum.

Kitchen floor and the bottom of the product must be at the same level, or problems may occur with air suction.

No objects may prevent installation at the back or side walls of the installation place.

Furniture dimensions must be in strict conformity with the dimensions given in this manual.

Do not install with the fridge and freezer adherent next to each other — see “Dual Cabin Installation”.

Check floor flatness with a bubble level tool.

Ambient temperature must be between 55°F (13°C) and 110°F (43°C).

FURNITURE & CLEARANCES

Furniture must be connected to the floor and wall properly. Side walls must be flat and free of clearances.

Minimum side wall thickness 5/8″ (16 mm). Minimum door thickness 3/4″ (19 mm).

Maintain 12″ from electric hobs or ovens, and 12″ (30 cm) from gas or fuel operated hobs or ovens.

The socket or fuse must be easily accessible and must not be hidden behind the product.

Plug or cable must not touch the back surface of the product.

Vent holes where air enters and exits must not be blocked, and must be cleaned of dust periodically.

DO NOT INSTALL

In open areas, in environments where water is dripping, or where the temperature is lower than 55°F (13°C). Wait 3–6 hours before energizing the product so the refrigerant and lubricants settle.

DOORS MUST OPEN AT LEAST 90° TO FULLY OPEN THE DRAWERS

Electrical and water **location.**

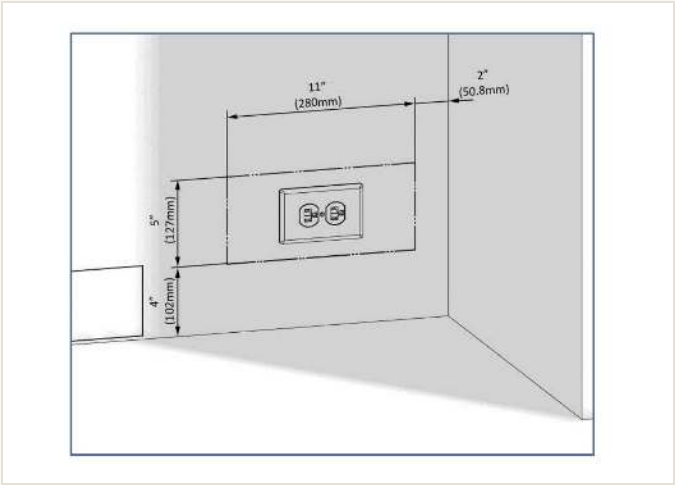

ELECTRICAL LOCATION — SINGLE COLUMN

Location of the electrical wiring must be within the range shown. Do not use extension cables or two-pin adaptors, and do not remove the ground terminal of the grounding cable. A qualified electrician must ensure the poles of the socket are connected correctly and that the grounding of the socket is correct.

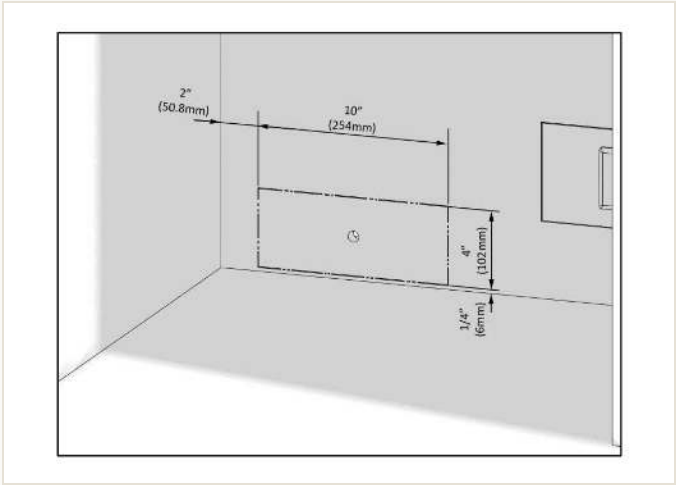

WATER LOCATION — SINGLE COLUMN

The water connected to the mains must be potable, and the water system must be within the range shown. The user must be able to switch it on and off with a valve when necessary. Objects that might pierce the water hoses or cause them to twist must not be present where the water line is installed.

WATER SUPPLY REQUIREMENTS

Operating pressure	**25–80 psi (1.7–5.5 bar)**
Above 80 psi	**Fit a pressure limiting device**
Never operate above	**120 psi**
Hose	**Min. 60″ (1.5 m) × 1/4″ dia.**
Connector thread	**1/4″ external diameter**

NOTE

A bypass is recommended for the water filtering system if a reverse osmosis system is used. Before completing the installation, make sure water flows and there is no leakage — otherwise water leaks may damage the floor, cabinets, or furniture.

Cabin dimensions and **levelness.**

These instructions are prepared for built-in installation: the appliance and panels fully seat into the gap, installed between two kitchen cabinets or decorative columns. This is the most common installation scenario.

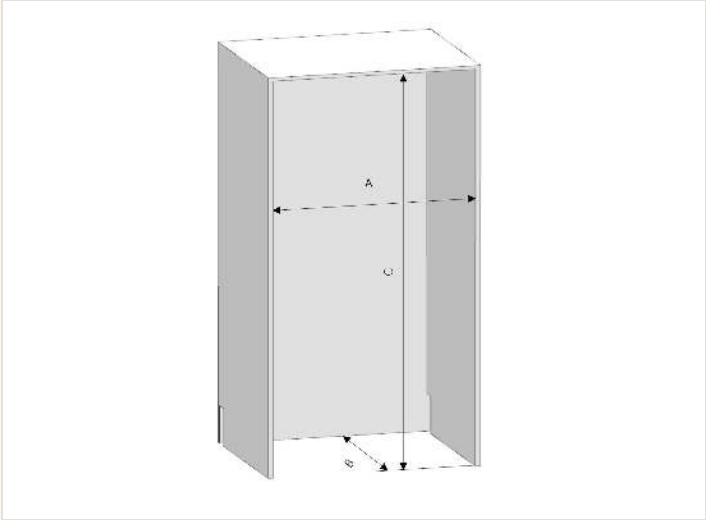

CABIN DIMENSIONS — BUILT-IN

Category		18"	24"	30"	36"
A	width	18" (457mm)	24" (609mm)	30" (762mm)	36" (914mm)
B	depth	25" (635mm)	25" (635mm)	25" (635mm)	25" (635mm)
C	height	84" (2134mm)	84" (2134mm)	84" (2134mm)	84" (2134mm)

DIMENSIONS BY COLUMN WIDTH

LEVELNESS OF LOCATION

Check the flatness of the floor with a bubble level tool.

Check the uprightness of the furniture flanges with a bubble level tool.

If flatness and uprightness are not correct, problems will arise during installation.

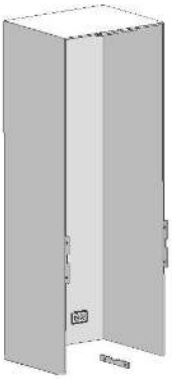

PANEL GAPS

Top	**1/8" (3 mm)**
Side — single installation	**1/8" (3 mm)**
Side — pair installation	**3/16" (4 mm)**

Product and install **dimensions.**

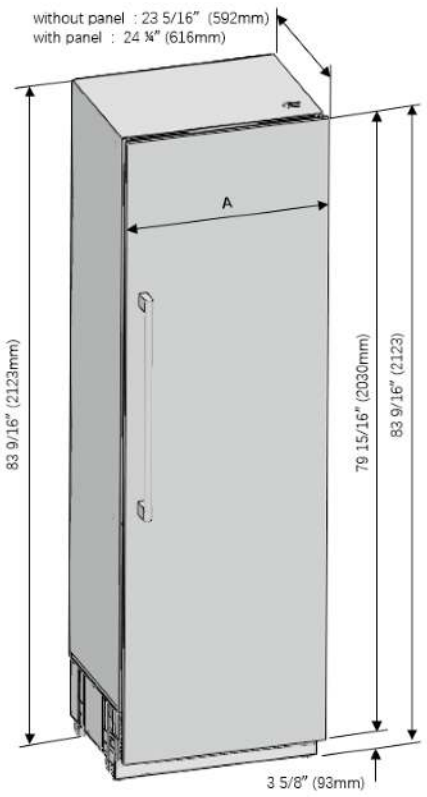

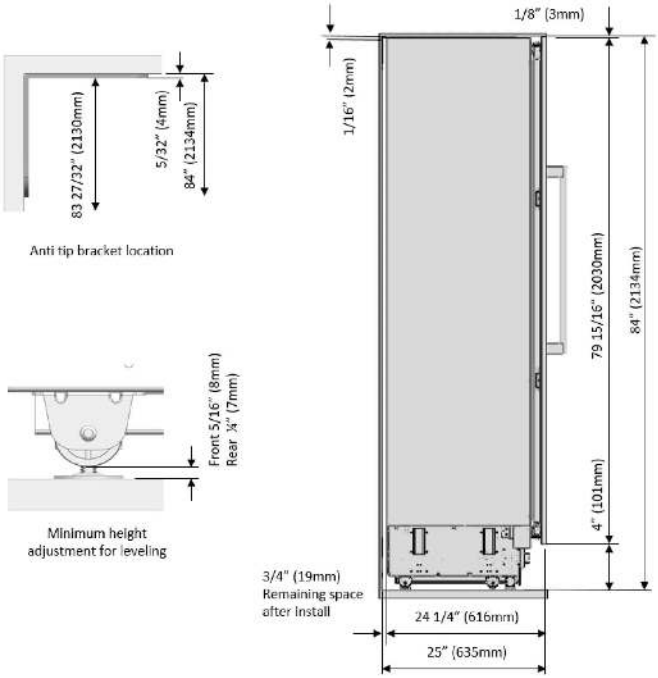

Category	18"	24"	30"	36"
A	20" (508)	26" (660)	32" (813)	38" (965)
B	4 3/8" (110)	4 3/8" (110)	4 3/8" (110)	4 3/8" (110)
C	11" (280)	14" (356)	16" (406)	19" (483)

MAXIMUM HEIGHT

The adjustable feet travel up to 1 9/16" (40 mm). With the feet fully extended the product height is 85 3/8" (2,169 mm). Frame the cabin to the cutout dimensions on page 14, not to a scaled drawing.

Install dimensions — **door swing and kick plate.**

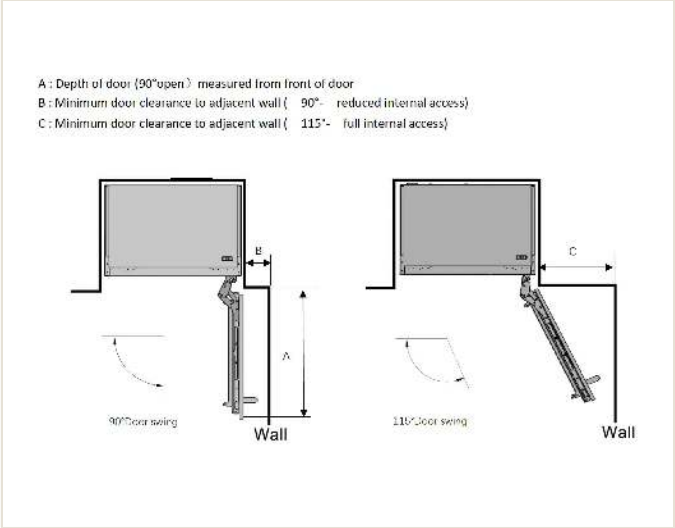

DOOR SWING CLEARANCE

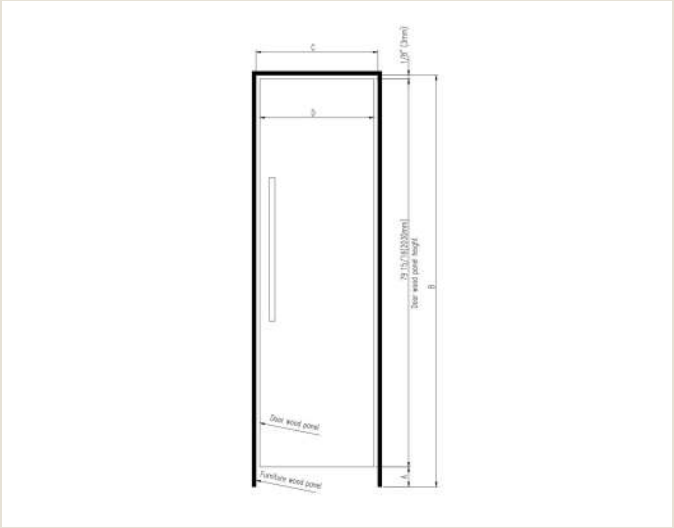

CABIN OPENING ELEVATION

Height of the kitchen countertop based on the min/max. height of the cabin;

Category	A	B
standard	4" (101mm)	84" (2134mm)
minimum	3 3/4"(96mm)	83 13/16" (2129mm)
maximum	5 3/8" (136mm)	85 3/8" (2169mm)

KICK PLATE HEIGHT, MIN. AND MAX.

Category	18"	24"	30"	36"
C	18" (457mm)	24" (609mm)	30" (762mm)	36" (914mm)
D	17 3/4" (451mm)	23 3/4" (603mm)	29 3/4" (756mm)	35 3/4" (908mm)

OPENING DIMENSIONS BY WIDTH

Unpacking and **mounting parts.**

UNPACKING

1. At least two people must carry the column.
2. Use a box cutter to remove the tapes. Cut the packaging board through the section illustrated in dotted lines and remove it.
3. Do not remove the tape holding the upper door until the column is placed into the cabin — risk of tipping over.

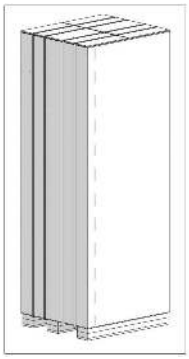

MOUNTING PARTS PREPARATION

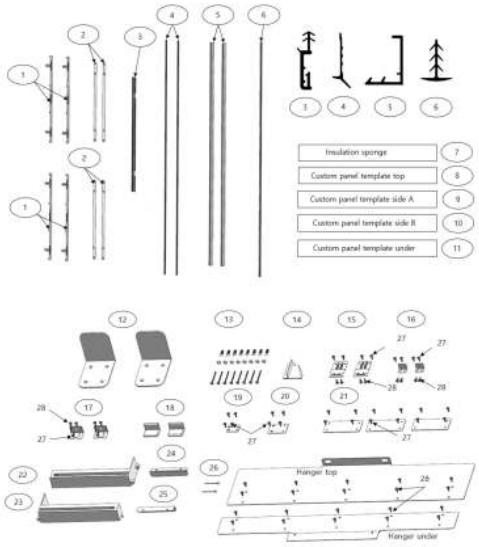

MOUNTING PARTS LIST

No	Part name	Spec	18"	24"	30"	36"	Remark
1	Door bracket side	T1.2,L=690.5, Cr+zn-coating	4	4	4	4	
2	Custom panel bracket side	T1.0*20*632,Cr+zn-coating	4	4	4	4	
3	Cabin top trim	PVC extrusion L=457	1	-	-	-	
	Cabin top trim	PVC extrusion L=609	-	1	-	-	
	Cabin top trim	PVC extrusion L=762	-	-	1	-	
	Cabin top trim	PVC extrusion L=914	-	-	-	1	
4	Cabin side trim	PVC extrusion L=1,874	2	2	2	2	
5	Custom panel side trim	PVC extrusion L=1,781	2	2	2	2	
6	Cabinet center trim	PVC extrusion L=1,874	1	1	1	1	Dual cabin
7	Insulation sponge	T3.0*400*1750	1	1	1	1	Dual cabin
8	Custom panel template top	Paper, 908*303	1	1	1	1	
9	Custom panel template side A	Paper, 887*127	1	1	1	1	
10	Custom panel template side B	Paper, 970.5*127	1	1	1	1	
11	Custom panel template under	Paper, 908*283	1	1	1	1	
12	Anti-tip bracket	T4.0, Cr+zn-coating	2	2	2	2	
13	Anti tip bracket screws and dowels	M8*L60	8	8	8	8	
14	Position adjustment jig	hips	1	1	1	1	
15	Cabinet bracket top	T1.0, Cr+zn-coating	2	2	2	2	
16	Cabinet bracket under	T1.0, Sus	2	2	2	2	
17	Door bracket	T1.0, Cr+zn-coating	2	2	2	2	
18	Cover door bracket	hips	2	2	2	2	
19	Fastener A	T2.0*43*29, Cr+zn-coating	1	1	1	1	Dual cabin
20	Fastener B	T2.0*56*41, Cr+zn-coating	1	1	1	1	Dual cabin
21	Fastener C	T2.0*56*41, Cr+zn-coating	3	3	3	3	Dual cabin
22	Air vent hinge part left	hips	1	1	1	1	For right hinge
23	Air vent hinge part right	hips					For left hinge
24	Door hinge bracket left top	T2.0, Cr+painting	1	1	1	1	For right hinge
25	Door hinge bracket left under	T2.0, Cr+painting					For left hinge
26	90° limit pin	Ø4	2	2	2	2	Door 90°opening
27	Cross washer head screw	M4x12, cross washer head	30	30	30	30	Fixing press part
28	Counter sunk head screw	M4X14, cross flat head	32	32	32	32	Fixing wood part

ITEM NUMBERS USED THROUGHOUT THIS GUIDE REFER TO THIS LIST

Mounting the **anti-tip brackets.**

INDUCTION HARDWARE

ANTI-TIP BRACKETS ARE MANDATORY

You must use anti-tip brackets to prevent the appliance from tipping over. Make sure there is no electrical or water connection where the screws will be tightened. Use the necessary protective equipment when drilling.

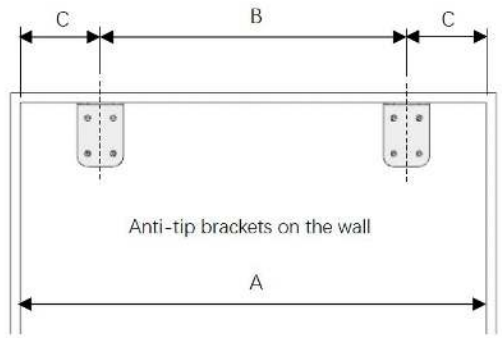

MARK THE WALL FOR THE BRACKETS (ITEM 12)

Category	18"	24"	30"	36"
A	18" (457mm)	24" (609mm)	30" (762mm)	36" (914mm)
B	11 5/8 (295mm)	17 5/8 (447mm)	23 5/8" (600mm)	23 5/8" (600mm)
C	3 3/16" (81mm)	3 3/16" (81mm)	3 3/16" (81mm)	6 3/16" (157mm)

BRACKET POSITIONS BY COLUMN WIDTH

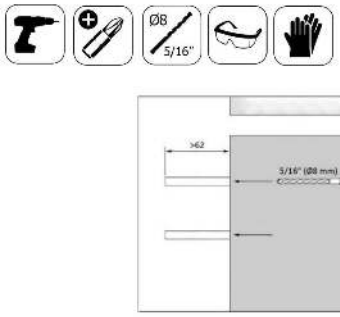

DRILL 5/16″ (Ø8) HOLES AND FIT THE DOWELS (ITEM 13)

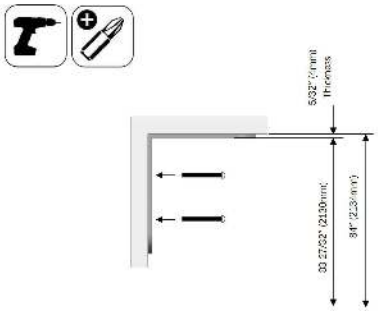

ALTERNATIVE ANTI-TIP — WOODEN GIRDER

Fit each anti-tip bracket (item 12) into place using 4 screws (item 13). Both brackets must be used. If there is furniture at the back wall, make sure that furniture is itself fixed to the concrete wall with suitable connection parts.

If the brackets cannot be connected securely, use wooden girders instead. Minimum section 3″×4″ (75×100 mm), width equal to the clearance, contacting the product over a maximum of 2″ (50.8 mm). There must be no clearance between the product and the girder.

Water line and **power**.

You will need a hose with a minimum length of 60″ (1.5 m) and a diameter of 1/4″ for the water connection. A connector with a 1/4″ external thread diameter must be used to join the hose end to the product. Choose method A or method B below to prevent the cable from getting jammed.

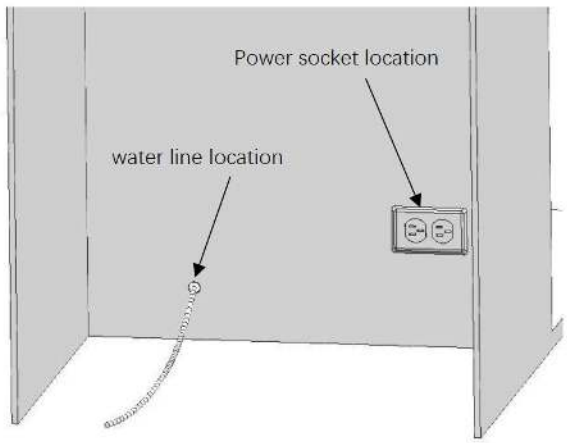

METHOD A — HOSE AND POWER AT THE BACK

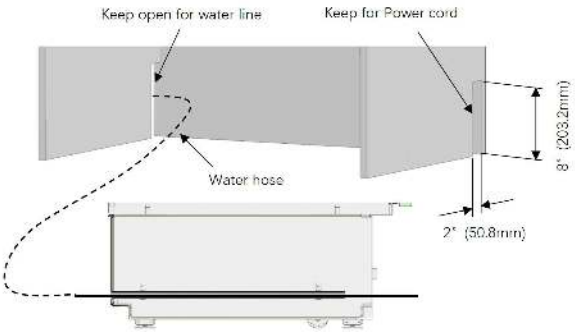

METHOD B — HOSE AND POWER AT THE SIDE



POWER CONNECTION

Cord and **NEMA 5-15P** three-prong grounded plug are pre-installed. Provide a dedicated, properly grounded 120 V · 60 Hz outlet on a 15 A circuit, positioned within the range shown on page 17 and accessible after installation. If the plug is not accessible once the column is set, the power must be able to be cut at the main switch.

Placing the column into the **cabin.**

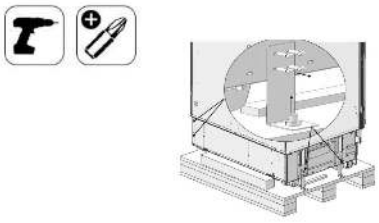

1 · FREE THE COLUMN FROM THE PALLET

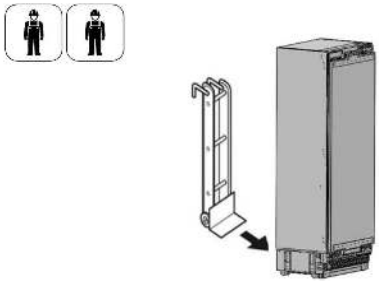

2 · MOVE WITH A CART

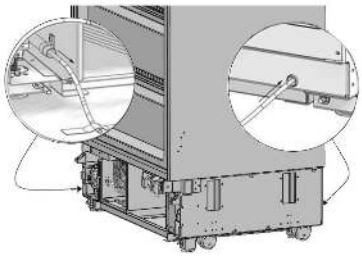

3 · ROUTE THE WATER SUPPLY HOSE

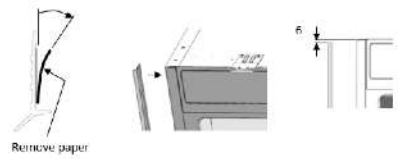

4 · FIT FURNITURE SIDE TRIM (ITEM 4)

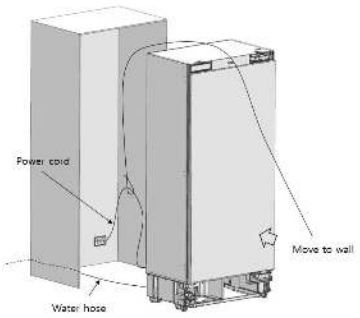

5 · PUSH IN, KEEPING THE CABLE CLEAR

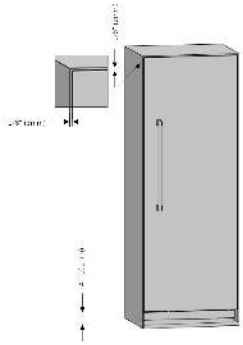

6 · ALIGN ON THE UPPER DOOR EDGES

WARNING

Risk of tipping over is high from the moment the column leaves the pallet. Do not open the doors until the product is placed into the cabinet. Make sure the power cord is not jammed when placing the product.

IF THERE IS STRAIN DURING PLACEMENT

The floor may be rough or uneven, or the adjustable feet may be loose. Use tape or similar protectors on the furniture edges where needed. Start the column and confirm it is working before continuing.

Height and panel **adjustment.**

HEIGHT ADJUSTMENT

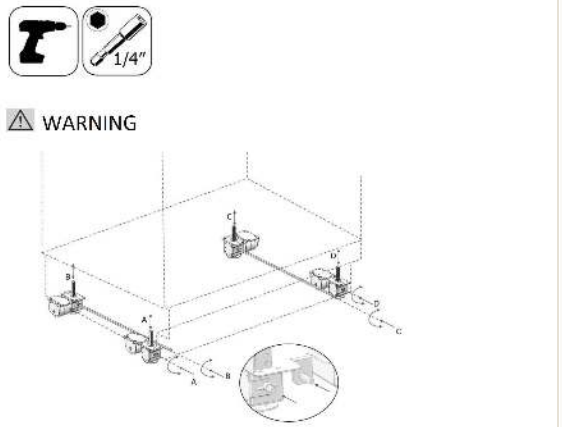

Adjust the column height using the adjustable feet. Raise the front feet first to reduce the risk of the cabin falling forward. Turn the key clockwise at **A/D** to lift the front and at **B/C** to lift the rear. After adjusting, check flatness in both the width and depth directions.

PANEL ADJUSTMENT

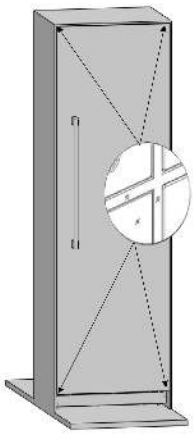

For a product with a custom panel, position the column so that the panel and the furniture surface are flush; use a gauge if necessary. For products without a custom panel, place the product using the position adjustment jig (item 14), which adjusts to four different panel thickness levels.

MAXIMUM TRAVEL

The adjustable feet reach a maximum of 1 9/16″ (40 mm), giving a product height of 85 3/8″ (2,169 mm). Level the case before adjusting any door — never the other way round.

Brackets, cabin bottom, vent and **trim**.

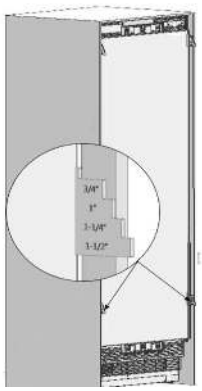

CABINET BRACKET TOP (15) AND UNDER (16), SCREWS (28)

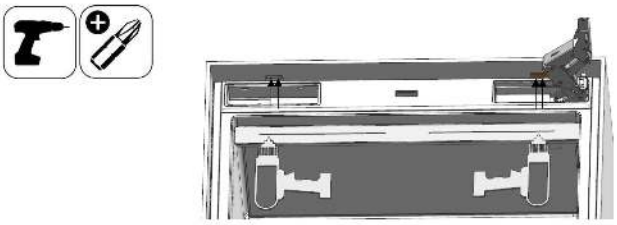

WATER CONNECTION AT THE CABIN BOTTOM

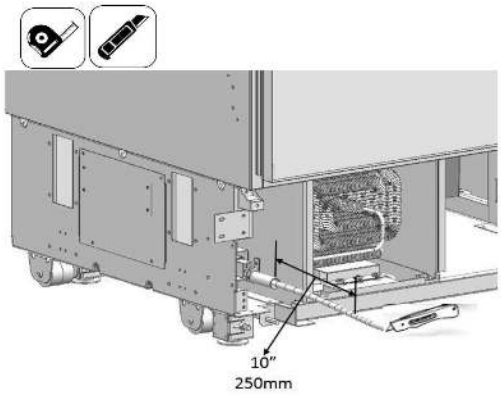

VENT HOLE ASSEMBLY — 5 SCREWS

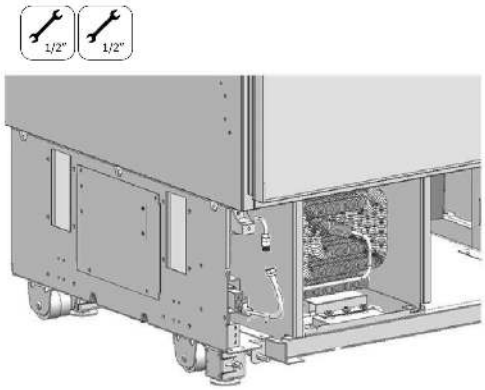

CABIN TOP TRIM (ITEM 3)

BEFORE SCREWING THE BRACKETS

Make sure water is supplied to the product and there is no leakage. Cut off the power before making the water connection, and keep the water valve closed while connecting the hose. The hose from the mains must be one piece — do not use extension hoses. Cold water mains only.

KICK PLATE

The lower vent hole can be moved forward and backward to suit the kitchen kick plate; travel must be 15/16″ (23 mm). The decorative kick plate must not sit in front of the upper vent hole level. A shut-off valve fitted here can be reached from the front without pulling the column out.

Custom panel **preparation.**

Before crafting the panel, check the strength of the panel material and the load of any attachments. The door can open to a maximum of 115°. If the door thickness is more than 1 1/2″ (38 mm), the door must not open more than 90° — use the 90° limit pin (item 26) from the mounting part kit in the drawer box, inserted into both the upper and lower hinge. The pin must be fully seated in the bracket or the door will not close properly.

Category	18″	24″	30″	36″
Custom panel maximum weight (included handle)	66lbs. (30kg)	66lbs. (30kg)	66lbs. (30kg)	66lbs. (30kg)

MAXIMUM PANEL WEIGHT BY WIDTH

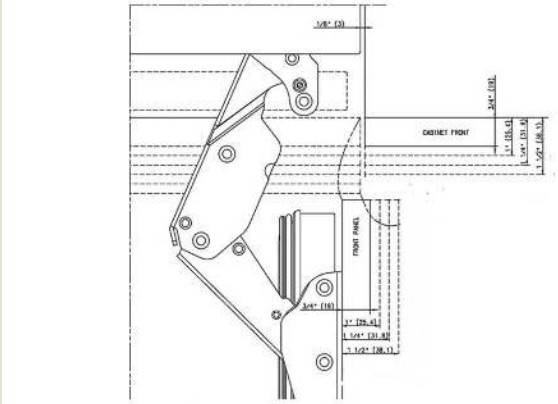

PANEL-ADJUSTMENT MECHANISM

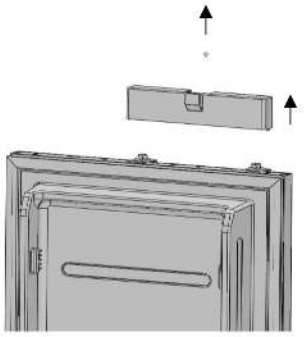

TOP HANGER BRACKET COVER — CONTAINS A MAGNET

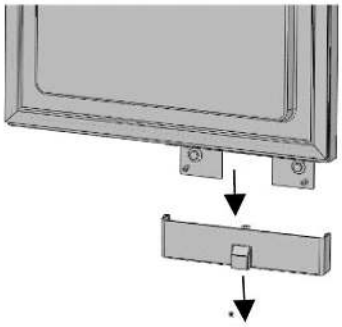

LOW HANGER BRACKET COVER

PANEL THICKNESS

Recommended door thickness is between 5/8″ (16 mm) and 3/4″ (19 mm). The magnet in the top hanger bracket cover is functional — do not confuse it with the low hanger bracket cover. Keep all removed decorative parts; they are needed if the door direction is changed later.

Cutout dimensions and **fitting the panel.**

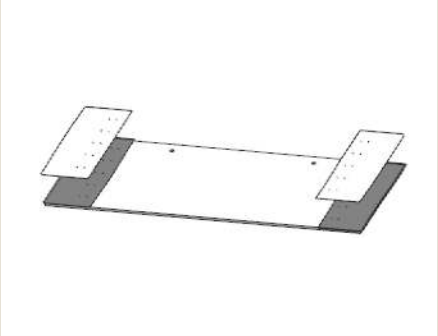

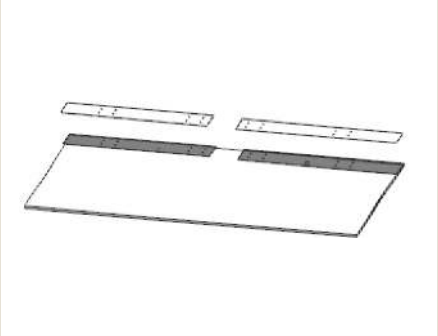

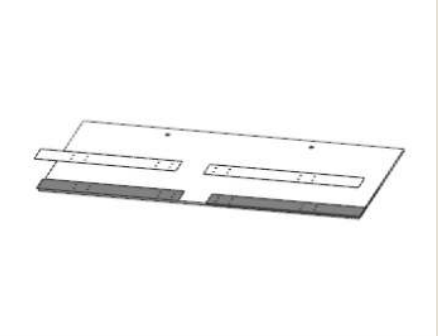

Take these dimensions into account when fixing the cradle parts to the custom panel. Use the custom panel templates (items 8–11) supplied with the product to mark out, and install the cradles with countersunk head screws (item 28) suited to the door thickness. Keep the template for future reference. Handle connection holes must be adjusted to the handles used in the kitchen design, and screws holding the handle must not protrude.

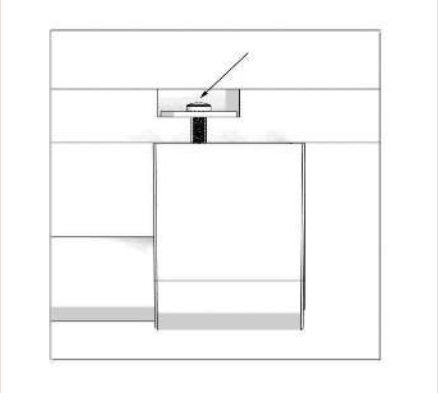

ALIGN THE UPPER PART WITH TWO BOLTS

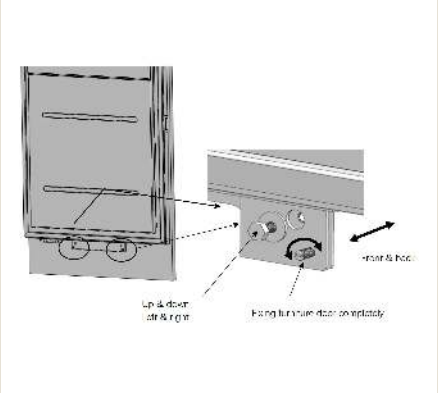

DOOR BRACKET (17), SCREWS (27 / 28)

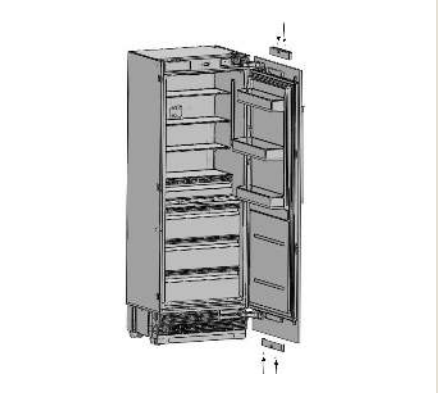

SIDE BRACKETS AND SIDE TRIM (ITEMS 1, 2, 5)

FLUSH ALIGNMENT

The custom panel and the kitchen furniture must be flush. Adjust in three dimensions using the two fixing bolts. Assuming the furniture dimensions are correct, the gap between furniture and custom door must be 1/8″ (3 mm); make all door adjustments from this distance. Adjust hinge hardness (position “O” to “I”) only after the door has been adjusted, with the door fully open.

Wine column — **panel cutouts and mounting.**

The wine column installs like the refrigerator and freezer columns — same 84″ cabin, anti-tip requirement and panel adjustment. Only the figures and hardware that differ are listed here.

CUTOUT AND CLEARANCE FIGURES

Dimension	RFC-W-24
A · custom panel width	**23 3/4″ (603 mm)**
B · cradle centre offset	**18 1/4″ (463 mm)**
C · cabin cutout width	**24″ (609 mm)**
E · clearance, door at 115°	**26″ (660 mm)**
F · clearance, door at 90°	**14″ (356 mm)**
Anti-tip bracket spacing	**24″ apart · 17 5/8″ in**
Side closing trim	**617 × 2159 mm**
Cabin height	**84″ (min. 83 3/4″, max. 85 5/16″)**
Cabin depth	**23 1/2″ bare · 24 1/4″ with panel**

Brackets sit 3 3/16″ (81 mm) down from the cabin top, on 5/16″ (Ø8 mm) dowel holes. Leave a 1/8″ (3 mm) gap between panel and furniture.

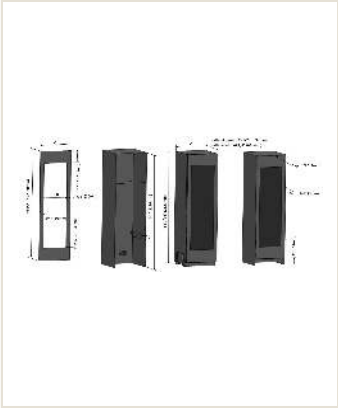

PANEL CUTOUT DIMENSIONS

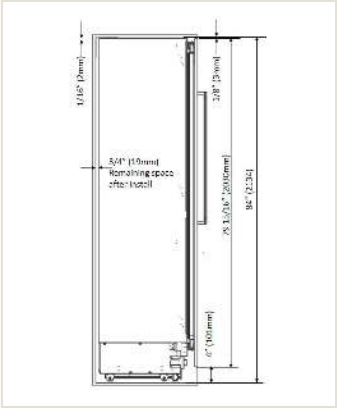

CABIN ELEVATION AND LEVELING

MOUNTING HARDWARE

Eight bracket furniture pieces — two across the top, three on each side. Fix to the cabinet with the truss washer head screws (ST4×12, 16 supplied), then into the furniture with 16 M4×14 screws.

Twenty countersunk head screws (ST4×14) for the trim and covers; eight ST4×35 for fixing the wooden door.

Take out the vent hole assembly — five screws — before pushing the column into the cabin, and refit it afterwards.

A position adjustment part and a furniture door preparation template are supplied; use the template to mark the cradle positions.

Two 90° limit pins are included. Fit both, upper and lower hinge, whenever the panel is thicker than 1 1/2″ (38 mm).

Level with the adjuster keys: A/D lift the front, B/C the rear, clockwise. Raise the front feet first, then check level across width and depth.

NOT SHARED WITH THE OTHER COLUMNS

No water line and no ice maker. The wine column needs only a grounded 115 V · 1.5 A socket with a NEMA 5-15P plug — skip the plumbing steps entirely.

Route the cord with the supplied nylon string so it cannot jam behind the cabinet.

The rear-panel carbon filter takes the place of the refrigerator water filter — leave it accessible.

Remove the beech glide racks before moving or tilting the column; there are no drawers or glass shelves to secure.

The air vent hinge part needed to reverse the door is supplied with the column; the air vent cover rotates 180° when the swing is changed.

Set the three zones after install — 41–68°F each — rather than a single cabinet temperature.

Wine column — **setting it into the cabin.**

Work in this order once the cabin, power and anti-tip brackets are ready. Two people are needed from step 2 onward.

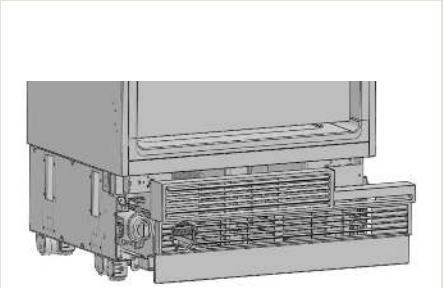

1 · VENT HOLE ASSEMBLY OFF — 5 SCREWS

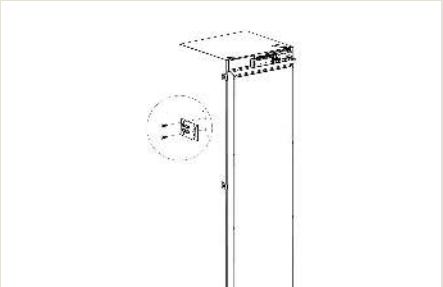

2 · BRACKET FURNITURE ON THE COLUMN

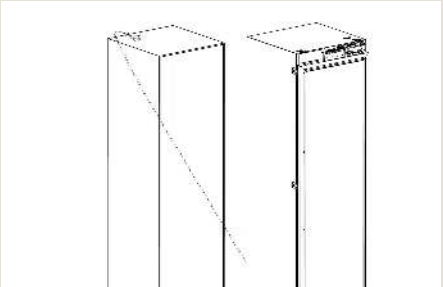

3 · PUSH THE COLUMN INTO THE CABIN

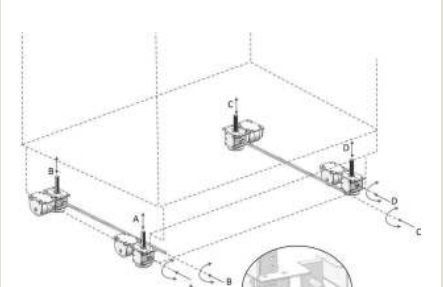

4 · LEVEL — A/D FRONT, B/C REAR

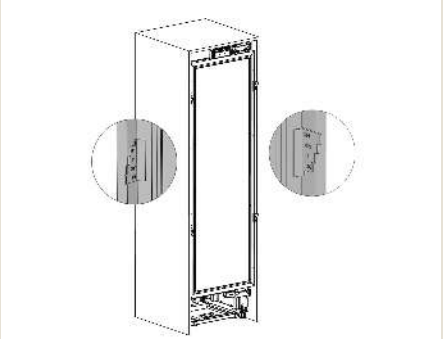

5 · SET LEVEL POSITION TO PANEL THICKNESS



6 · 16 SCREWS INTO THE FURNITURE

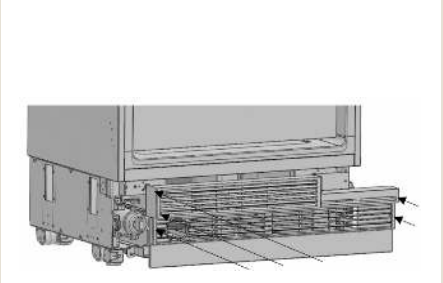

7 · VENT HOLE ASSEMBLY BACK ON

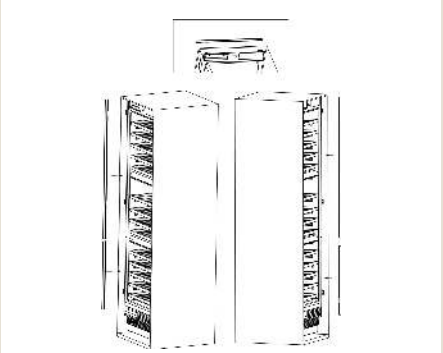

8 · SIDE CLOSING PARTS, 617 × 2159 MM

ORDER MATTERS

Raise the front feet before the rear so the column cannot tip forward, and check level across both width and depth before any bracket is screwed into the furniture. The plug must remain accessible after installation.

Wine column — **panel, pins and racks.**

The panel sequence matches the other columns; these are the wine-specific details and the two service steps unique to the glide racks.

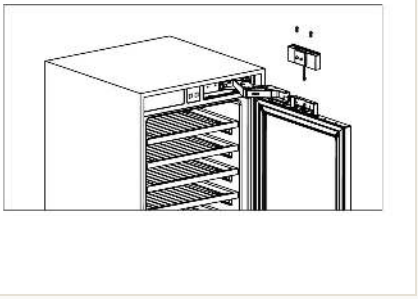

1 · REMOVE HANGER COVER AND ADJUSTERS

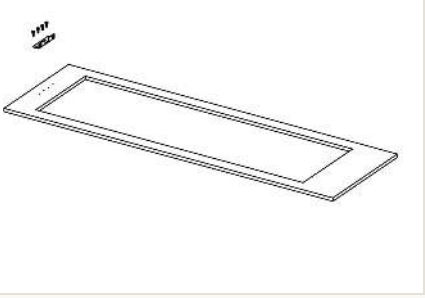

2 · TEMPLATE, THEN CRADLES

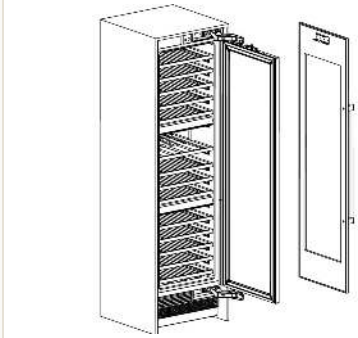

3 · HANG THE FURNITURE DOOR — 2 SCREWS

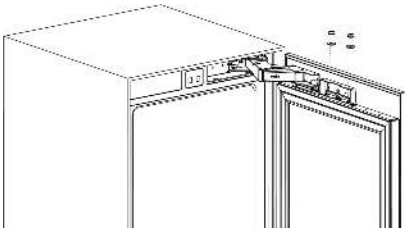

4 · ALIGN FRONT/BACK, LEFT/RIGHT, UP/DOWN

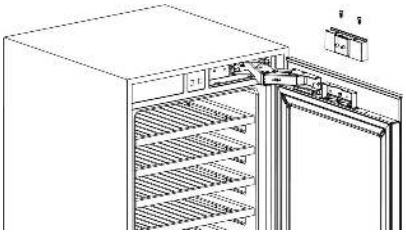

5 · UPPER DECORATION COVER, ST4×35

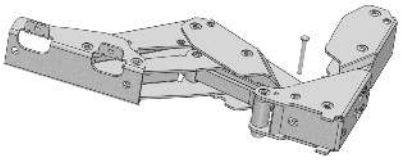

6 · 90° LIMIT PINS, UPPER AND LOWER

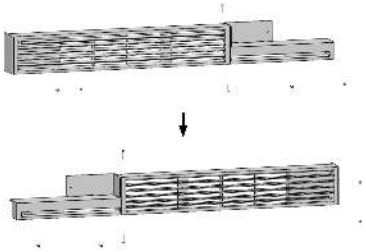

7 · AIR VENT COVER ROTATES 180°

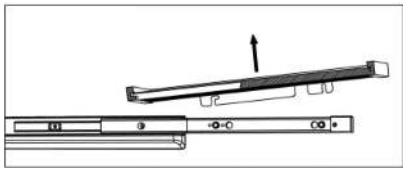

8 · GLIDE RACK REMOVAL

WINE-SPECIFIC CAUTIONS

A magnet sits in the top hanger bracket cover — it is functional, and must not be swapped with the low hanger bracket cover. Fit both 90° limit pins whenever the panel exceeds 1 1/2″ (38 mm); a pin that is not fully seated stops the door closing. Empty a glide rack before removing it, and keep the door preparation template for future service.

Changing the door opening **direction**.



1 · SET HINGE HARDNESS TO “0”, REMOVE SIDE TRIM (5)



2 · REMOVE DOOR COVERS AND ADJUSTMENT KITS

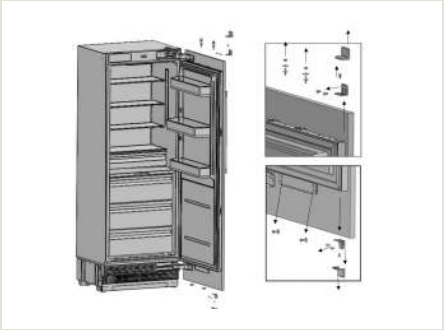

3 · REMOVE HINGE SCREWS, LAY THE DOOR DOWN

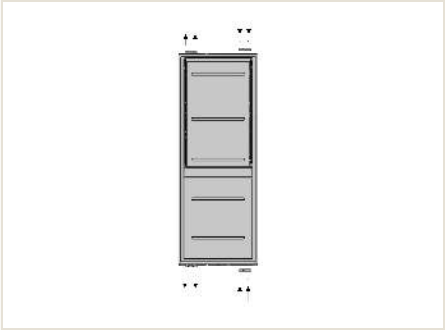

4 · FIT NEW HINGE BRACKETS (24, 25)



5 · MOVE HINGES AND HINGE CAPS ACROSS

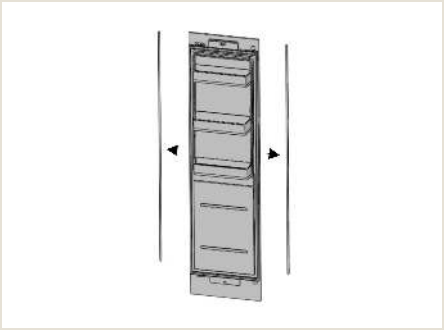

6 · ROTATE THE CUSTOM PANEL 180°

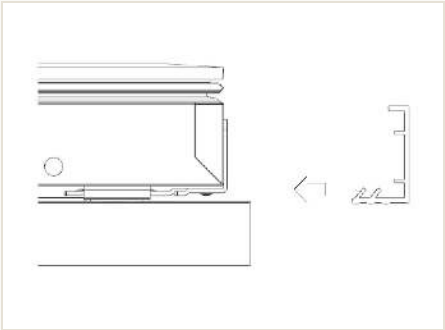

7 · CHANGE THE AIR VENT COVER DIRECTION

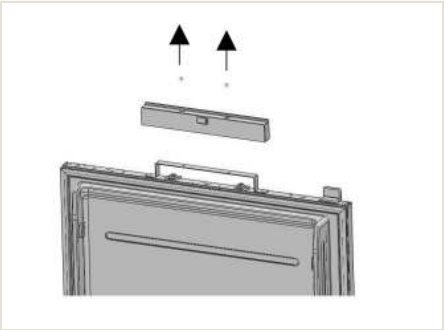

8 · REFIT COVERS, HANG THE DOOR WITH 4 SCREWS

NOTE — 18″ FREEZER COLUMN (FRC-18)

The 18″ freezer column door opens from the right only, with the hinges on the left. The door swing cannot be reversed.

ATTENTION

Set the hinge hardness to “0” before starting; continuing without doing so may cause injury. The custom panel and the clad door are released when the fixing screws are removed — tape the panel to the inner door or ask for help to stop it falling. Remove the lower right hinge and fix it to the upper left slot, then the upper right hinge to the lower left slot, and move the hinge caps to the opposite side.

Dual cabin **installation.**

For a dual cabin installation you must request the **Dual Cabin Installation Kit** from authorised service. Check the cabin dimensions before starting. There are two panel-adjustment mechanisms at the top and two at the bottom of each door; adjust the panels so they align with the surrounding cabinetry — 1/8″ (3 mm) at the top and 3/16″ (4 mm) at the sides for a pair.

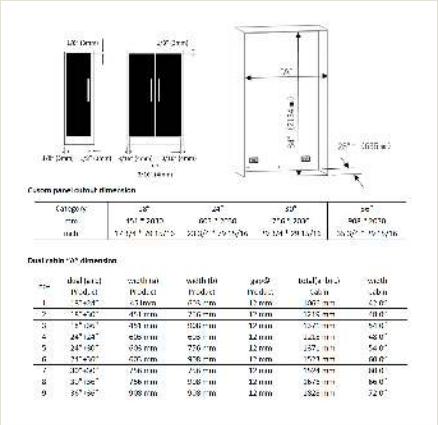

CABIN DIMENSIONS AND ELECTRICAL LOCATION

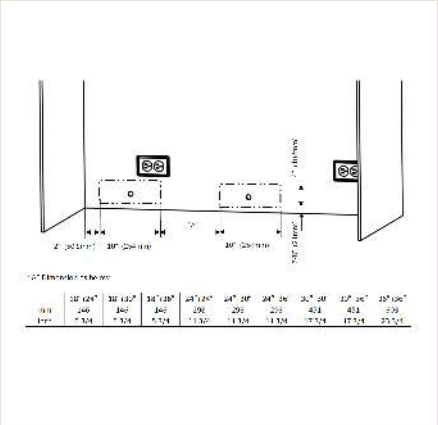

ANTI-TIP BRACKET LOCATION

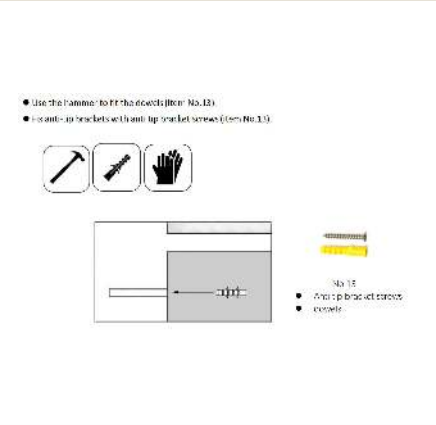

FASTENERS AND INSULATION SPONGE (ITEM 7)

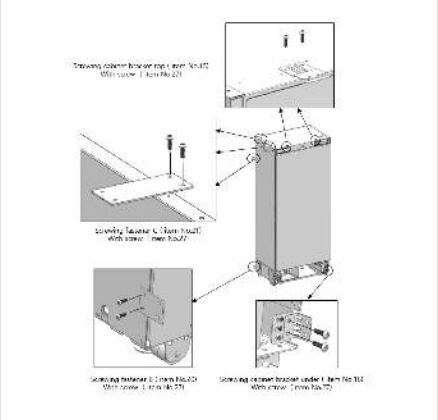

BRING THE TWO PRODUCTS INTO ALIGNMENT

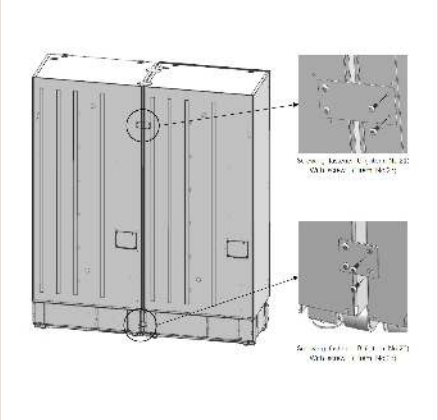

SCREW THE FASTENERS TO THE SECOND PRODUCT

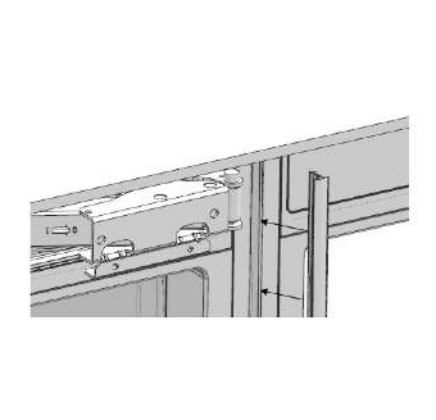

CABINET CENTRE TRIM (ITEM 6)

SEQUENCE

Fix the fasteners and stick the insulation sponge (item 7) to the side panel so it sits between the two cabins. Bring the columns side by side, confirm alignment, then screw the fasteners to the second product. Push the pair into the cabin, make the power and water connections, adjust the heights on the feet, and fix each cabinet bracket top (15) and under (16) to the cabin with screws (28). Close the top with the cabinet top trim (3) and the centre with the cabinet centre trim (6).

Living with a **column.**

ROUTINE CARE

1. Clean the interior surface with warm water and a soft cloth. Make sure the interior is dry before restarting.
2. Back-wall cooling needs clear air. Do not pack shelves against the rear wall or block the vents at top and bottom.
3. Replace the water filter every 130 days, or when the filter symbol flashes. A starved filter shows up as slow fill and hollow ice.
4. Wipe gaskets and the door sill. A dirty seal is the first cause of frost and short cycling.
5. Stainless fronts take a mild detergent worked with the grain. Vega and Orion gold is wiped dry only.
6. Clean the dust that accumulates on the vent holes periodically so the inverter compressor is not working against it.

WINE COLUMN — THREE ZONES

Set each zone to the wine held in it, not to a single house temperature. Range 41–68°F (5–20°C).

Eleven glide racks hold up to 100 bottles; pull racks out fully rather than reaching over stored bottles.

Replace the rear carbon filter every 3–6 months — every 3 months in a kitchen. Turn it counterclockwise to unlock.

Keep the cabin dark; UV is the one thing a cooling zone cannot correct for.

SAFETY IN USE

Installation and service by qualified personnel only.

R600a is a flammable refrigerant. Do not pierce the circuit; ventilate the room if a leak is suspected.

Anti-tip brackets are not optional on a built-in column.

Do not let children hang on an open door or stand in a drawer.

Two-person minimum to move a case — up to 472 lb at 30″.

LEAVING THE COLUMN EMPTY

If the appliance will be left empty for a long period, unplug it and — after careful cleaning — leave the door ajar so air can circulate inside the cabin, avoiding condensation, mould and odours. Turn the ice maker off and shut off the water supply before leaving. On return, turn the ice maker on and discard the first full bin of ice.

PARTS & ACCESSORIES

Adjustable glass shelves and door bins — included

Water filter cartridge — included, replaceable

Carbon filter — wine column, replace every 3–6 months

Beech glide racks and 90° limit pins — wine column

Anti-tip bracket kit — included

Dual cabin installation kit — from authorised service

Custom panel fixing kit and templates — Panel Ready only

Check here before calling for **service.**

Symptom	What to check
Running warm	Check the door seals and that nothing blocks the rear cooling wall or the vents. Confirm the cabin is not overloaded and that the door has not been left open. Allow 6 hours after start-up before judging temperature.
Door alarm sounding	A door or drawer is proud. If it recurs, the case may have moved off level — recheck with a bubble level and adjust the feet.
No ice or slow water	Filter due for replacement, supply valve partly closed, or the line kinked behind the case. Check supply pressure is between 25 and 80 psi.
Cloudy or off-tasting ice	After connecting to a water source or replacing the filter, fill and discard two full containers of ice.
Door not flush	Level the case first, then adjust the panel mechanisms — never the other way round. Target 1/8″ (3 mm) to the furniture.
Door will not close properly	If a 90° limit pin (item 26) is fitted, confirm it is fully seated in the bracket. Check the panel weight is within the published limit.
Controls unresponsive	The panel locks automatically after 3 minutes. Press the lock key for 3 seconds to unlock. Check the appliance is not in Sabbath or Showroom mode.
Display shows a high temperature	Holiday Mode sets both zones to 63°F (17°C). Disable it before loading food into the fresh food compartment.
Noise from the cabinet	Compressor start-up and the liquids and gases in the sealed system make noise. This is normal. Persistent vibration usually means the case is not level.
Condensation inside	Store food in closed containers, avoid hot food, and do not leave the door open. Warm front edges are normal and prevent condensation.
Wine column shows E1–E12	A zone probe has failed open or short. Silence the alarm with the on/off key and call for service; see the fault code table on page 12.
Wine column displays read Sn	Showroom mode is active — the compressor is stopped. Repeat the two-key press to exit, or it clears itself after 72 hours.
Wine odors in the cabin	The carbon filter is past due. Replace it every 3–6 months.
Water on the floor	Shut off the supply immediately and check every water connection. Never operate the appliance where the water pressure can exceed 120 psi.

STILL NOT RESOLVED

Note the model and serial number from the rating label and call (775) 898-7562 or email info@inductionhardware.com. Do not attempt repairs to the sealed refrigerant circuit — repairs by unqualified persons void the warranty.

Built to last, backed for **life.**

INDUCTION HARDWARE

At Induction Hardware, we believe great products should be built to last and supported by people who care. Your appliance is backed by our **Induction-Clad** warranty as part of our commitment to quality, craftsmanship, and long-term reliability.

For full warranty details, please visit the warranty page on our website, where the current terms are kept: inductionhardware.com/pages/warranty-and-service

Thank you for being part of the Induction Hardware community. If you ever need assistance, our team is always here to help.

WHAT VOIDS COVERAGE

Installation, repair or other procedures performed by unqualified persons.

Damage caused by misuse, or by operating the appliance outside the published electrical and water limits.

Damage to the sealed refrigerant circuit caused by puncture or improper handling.

BEFORE YOU CALL

Have the model and serial number from the rating label to hand.

Work through the troubleshooting table on page 35 first.

Keep your receipt — it is the proof of purchase and may be needed for service under warranty.

SERVICE CONTACT

Phone	**(775) 898-7562**
Hours	**Mon–Fri 9–4 PST**
Email	**info@inductionhardware.com**
Manuals & resources	**inductionhardware.com/pages/manuals**

AN INDUSTRY FIRST

We build to a fit-and-finish standard the appliance industry doesn't — a digital inverter compressor, premium materials, no expense spared. So we back every product we make for as long as you own it.

Keep this manual with the **receipt.**

Thank you for purchasing your Induction Hardware column. This manual contains important information regarding the proper installation, use, and maintenance of your appliance. Following this manual will ensure that your product will work at its peak performance and efficiency.

Please write down the model number and serial number below for future reference. Both numbers are located on the rating label inside the cabin and are needed to obtain warranty service. You may also want to staple your receipt to this manual, as it is the proof of your purchase and may also be needed for service under warranty.

MODEL NUMBER

SERIAL NUMBER

DATE OF PURCHASE

INSTALLER / COMPANY

BEFORE CONTACTING CUSTOMER SERVICE

If you received a damaged product, immediately contact the retailer or dealer that sold you the product.

Read and follow this instruction manual carefully to help you install, use and maintain your unit.

Read the troubleshooting section of this manual — it will help you diagnose and solve common issues.

CONTACT US

Website	**www.inductionhardware.com**
Phone	**(775) 898-7562**
Email	**info@inductionhardware.com**
Address	**12920 Old Virginia Road, Suite 160 Reno, Nevada 89521, USA**

INDUCTION HARDWARE

Thank you for choosing Induction Hardware.
The Future of Cooking is Now.



Thank you for being part of the Induction Hardware community.

If you ever need support, our team is always here to help.

www.INDUCTIONHARDWARE.com