T36FL814NS
36-INCH FREESTANDING FRENCH DOOR REFRIGERATOR, 2-DRAWER
MASTERPIECE® COLLECTION HANDLES



Home Connect

Also Available In:

T36FL824NS – Professional Collection Handles

FEATURES & BENEFITS

- Full panel illumination ensures clear visibility, with theater lighting that brightens as doors open
- ★ - Dual Compressors & Evaporators provide built-in performance for precise temperature management and lasting durability
- ★ - ThermaFresh® Pro Drawers let you set optimal temperature and humidity levels, while the integrated ethylene absorber slows ripening, keeping produce fresh longer.
- ★ - All-new Mini Diamond Ice maker produces small ice for rapid, uniform cooling and the UltraClarity® Pro internal water dispenser provides added convenience
- Adjustable shelves that maximize storage capabilities, featuring easy-to-clean door bins—including designated gallon bins for larger items
- Easy-to-clean stainless steel exterior, just wipe with a damp cloth; no special cleaner required
- Wi-Fi enabled refrigeration lets you control temperature remotely, receive open-door alerts via the Home Connect® app, and connect with smart home platforms like Amazon Alexa

STYLE	
Door Style	Stainless Steel Panel
Handle Style	Masterpiece®
Interior Finish	Illuminated Back Panel
Door Configuration	4-door
INNOVATION	
Wi-Fi-Enabled for Control w/Home Connect® App	Yes
Remote Monitoring and Control	Yes
PERFORMANCE	
ThermaFresh® Pro	Yes
Dual Compressor	Yes
Dual Evaporators	Yes
Automatic Defrosting	Yes
Modes	
Eco, Sabbath, Vacation, Demo, SuperCool, SuperFreeze®	
Internal Water Dispenser	Yes
UltraClarity® Pro Water Filter (6 Months)	Yes
Air Fresh Filter	Yes
Ethylene Filter (6 Months)	Yes
CAPACITY AND STORAGE	
Total Capacity (cu. ft.)	20.4
Refrigerator Capacity (cu. ft.)	14.4
Freezer Capacity (cu. ft.)	6
Tiered Freezer Storage Drawer	3 Tier
ThermaFresh® Pro Temperature & Humidity Managed Drawers	1
ThermaFresh® Pro Drawer Modes (°F/Humidity)	
Meat/Fish (29°F (-2°C)/Low), Fruit (32°F (0°C)/Low), Vegetables (32°F (0°C)/High), Beverages (34°F (1°C)/Low), Snacks/Misc. (40°F (4°C)/Low)	
Storage Shelves	4 Adjustable, 1 Fixed
Shelf Material	Glass w/Metal Profile
Standard Door Bins	3 Adjustable
Gallon Door Bins	2 Adjustable
Dairy Door Bins	1 Adjustable
GENERAL FEATURES	
Full 72" Height and True Counter-Depth for Built-In Appearance	Yes
Internal Control Panel	Yes
Water Tank Capacity (oz.)	30.4
Water Filter Replacement Indicator	Yes
Ice Maker with Mini Diamond Ice System	Yes
Ice Production (24 Hrs.), Mini Diamond Ice (lbs.)	3.5

★ THERMADOR® EXCLUSIVE

T36FL814NS
36-INCH FREESTANDING FRENCH DOOR REFRIGERATOR, 2-DRAWER
MASTERPIECE® COLLECTION HANDLES

GENERAL FEATURES (CONTINUED)	
Ice On / Off	Yes
Ice Storage Capacity (lbs.)	8.8
Lighting	
LED Recessed Side Light Bars & Fully Illuminated Back Panel	
Independent Cooling Systems	2
Open Door Alarm	Yes
Cooling System	Free Flow™ Cold Air
Maximum Sound Level	40 dBA
Star-K Certified Sabbath Mode	Yes
ENERGY STAR® Certified	Yes
Annual Energy Consumption*	568 kWh / yr*
OPERATING TEMPERATURE	
Refrigerator: 33°F (1°C) to 43°F (6°C)	
Freezer: -7°F (-22°C) to 6°F (-14°C)	
ThermaFresh® Pro Drawers: 29°F (-2°C) to 40°F (4°C) 5 Preset Modes	
SuperCool: 36°F (2°C) for 6 Hours	
SuperFreeze®: -22°F (-30°C) for 8 Hours	
INSTALLATION FEATURES	
Four Point Front Adjustable with 4 Wheels	Yes
Front Serviceable	Yes
TECHNICAL SPECS	
Required Power Supply	110-127 V, 60 Hz, 10 Amp
Plug Type	120V-3-Prong
Power Cord Length (Inches)	67"
DIMENSIONS AND WEIGHT	
Overall Width (Inches)	35 5/8"
Overall Height (Inches)	72"
Overall Depth (Inches)	31 1/8"
Overall Depth Without Hinges and Doors (Inches)	24"
Overall Depth With Hinges and Doors, No Handles (inches)	28 3/4"
Required Cutout Size (HxWxD) (Inches)	72" x 36" x 25"
Net Weight (Approx.) (lbs.)	348
Gross Weight (Approx.) (lbs.)	375

OPTIONAL ACCESSORIES	
Replacement Water Filter	REPLFLTR55
Ethylene Filter Refill (Part No.)	17005225
Ethylene Filter Starter Kit (Part No.)	17005228
Replacement Carbon Air Filter (Part No.)	10009874
90 Degree Door Stopper	10012733
WARRANTY	
Limited Warranty, Parts & Labor	2 Years
SUPPLEMENTAL MATERIAL	
CAD File	Click Here to Download
Installation Manual	Click Here to Download
Use & Care Guide	Click Here to Download
Warranty	Click Here to Download
Energy Guide	Click Here to Download
Home Connect® Quick Start Guide	Click Here to Download

PFAS

*Estimated annual energy consumption. Exact usage may vary.

T36FL814NS
36-INCH FREESTANDING FRENCH DOOR REFRIGERATOR, 2-DRAWER
MASTERPIECE® COLLECTION HANDLES

CUTOUT DIMENSIONS

Measurements in inches (mm)

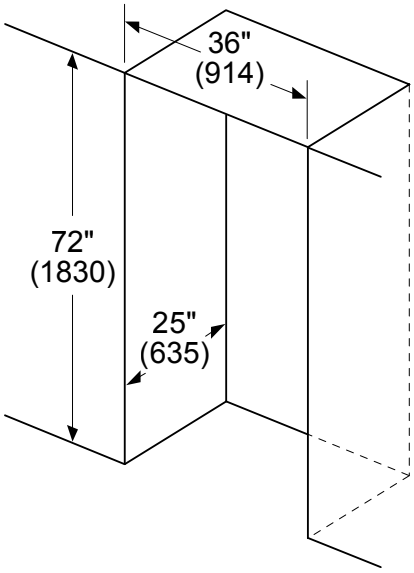

Leave ½" (12.7) gap at the top and 1" (25.4) behind the refrigerator for proper ventilation.

It is recommended that you do not install the refrigerator near a heat source such as a stove or a range.

TOP VIEW CLEARANCE

Measurements in inches (mm)

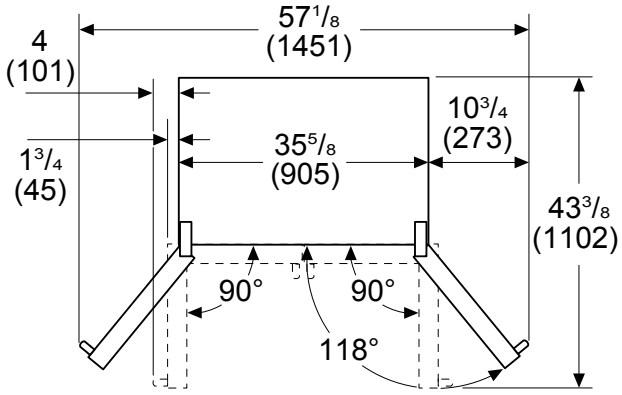

Drawers can be pulled out with door open to 90°
Drawers can be taken out with door completely opened

T36FL814NS
36-INCH FREESTANDING FRENCH DOOR REFRIGERATOR, 2-DRAWER
MASTERPIECE® COLLECTION HANDLES

PRODUCT DIMENSIONS

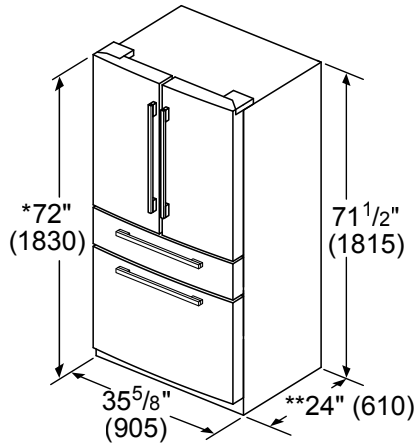

*Add 5/8" (17) with front leveling feet fully extended
**Add 1" (25) for fixed spacers on back

measurements in inches (mm)

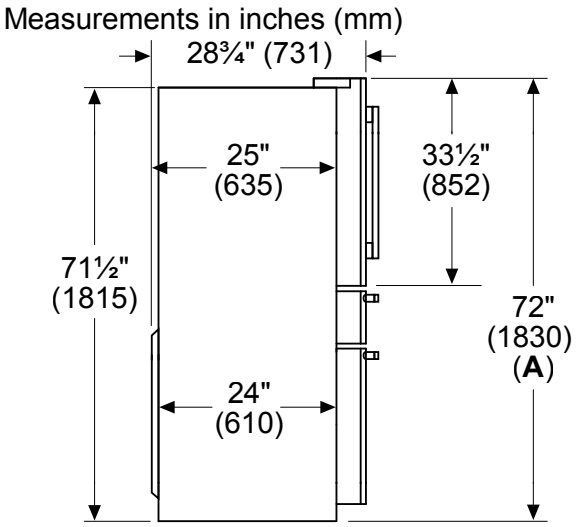

A: Add 5/8" (17) with front leveling feet fully extended

measurements in inches (mm)

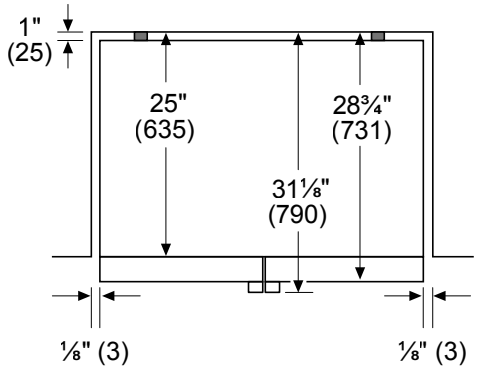

ACCESSORIES (OPTIONAL)



REPLFLTR55
Replacement Water Filter



17005228
Ethylene Filter Starter Kit



17005225
Ethylene Filter Refill



10012733
90 Degree Door Stopper



10009874
Replacement Carbon Air Filter

These warranties give you specific legal rights and you may have other rights that vary from state to state. Limited warranty from date of delivery. For complete warranty details, refer to your Use & Care manual, or ask your dealer.

Specifications are for planning purposes only. Refer to installation instructions and consult your countertop supplier prior to making counter opening. Consult with a heating and ventilation engineer for your specific ventilation requirements. For the most detailed information, refer to installation instructions accompanying product or write to Thermador indicating the model number. Specifications are correct at time of printing. Thermador reserves the right to change product specifications or design without notice. Some models are certified for use in Canada. Thermador is not responsible for products that are transported from the U.S. for use in Canada.

1 800 735 4328 | USA THERMADOR.COM | CANADA THERMADOR.CA | ©2026 BSH HOME APPLIANCES CORPORATION. ALL RIGHTS RESERVED.