Riverside FURNITURE
email: info@riverside-furniture.com

Rosalie Bedroom Assembly Instructions

Made in Viet Nam

King Woven Bed

Warning:
- Be sure to check all packing material carefully for small parts, which may have come loose inside the carton during shipment.
- To prevent possible scratches and damage, this furniture **MUST BE ASSEMBLED BY TWO PEOPLE** on a soft surface such as a blanket or carpet.

Hardware and Parts packed with the Headboard

King Woven Headboard - 30780	Headboard Post (Left)	Headboard Post (Right)	Headboard Stretcher
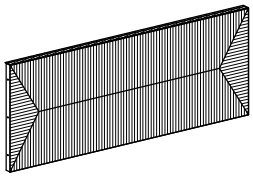	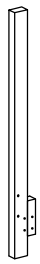		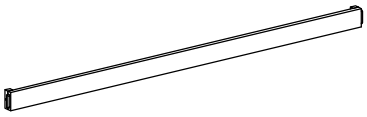
H-A 1 pc	H-B 1 pc	H-C 1 pc	H-D 1 pc

Allen Head Bolt M6-32 x 40mm	Flat Washer Ø6 x Ø13mm	Lock Washer Ø9 x Ø13mm	Allen Head Bolt M8-32 x 65mm	Flat Washer Ø8 x Ø20mm	Allen Key 4 x 110mm
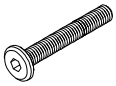			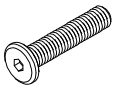	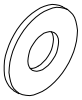	
H-E 2 pcs	H-F 2 pcs	H-G 8 pcs	H-H 6 pcs	H-I 6 pcs	H-J 1 pc

Hardware and Parts packed with the Footboard

King Woven Footboard - 30781	Wood Slat (77" long)	Support leg (8-3/4" x 1-1/4" x 1-1/4")	Wood Screw Ø4 x 25mm	Tool Required (not provided) Phillips Screwdriver
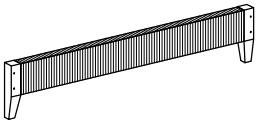	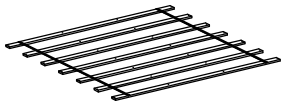		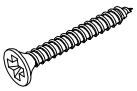	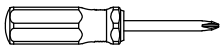
F-A 1 pc	F-B 1 set	F-C 14 pcs	F-D 14 pcs	

Hardware and Parts packed with the Bed Rails

Bed Rails - 30772	Thread Bolt M8-32 x 70mm	Arc Washer 14 x 26mm	Lock Washer Ø10 x Ø15mm	Hex Nut M8-32 x 7mm	Open Wrench 13 mm
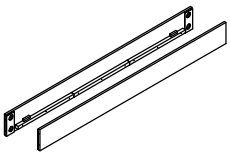		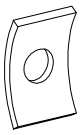			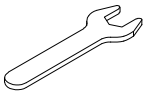
R-A 2 pcs	R-B 8 pcs	R-C 8 pcs	R-D 8 pcs	R-E 8 pcs	R-F 1 pc

6/6 King Bed
30780 - *6/6 Woven Headboard*
30781 - *6/6 Woven Footboard*
30772 - *5/0-6/6 Queen-King Bed Rails*

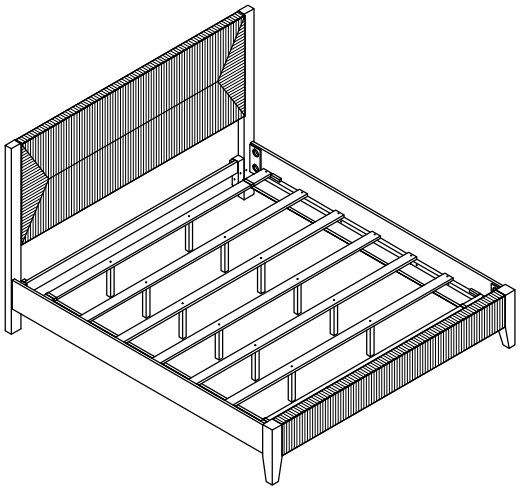

Riverside FURNITURE
email: info@riverside-furniture.com

Rosalie Bedroom Assembly Instructions

Made in Viet Nam

King Woven Bed

STEP 1

6/6 King Bed
30780 - *6/6 Woven Headboard*

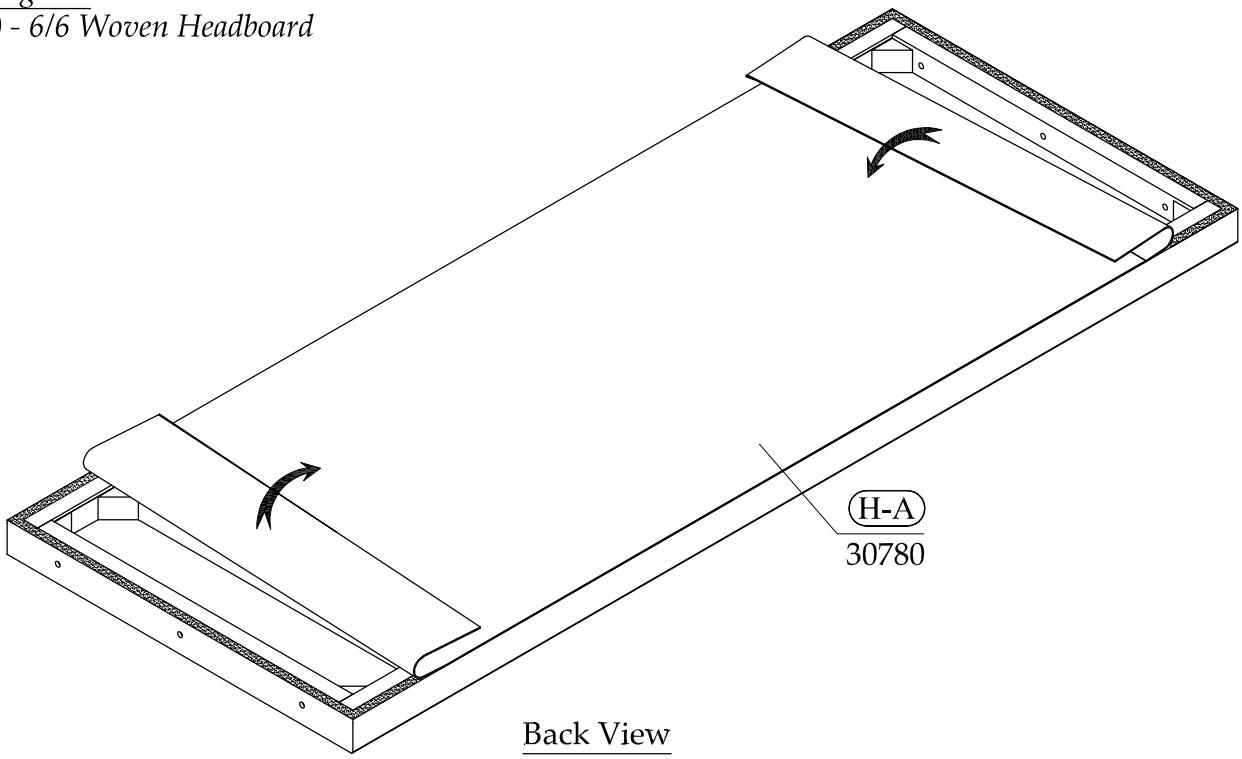

STEP 2

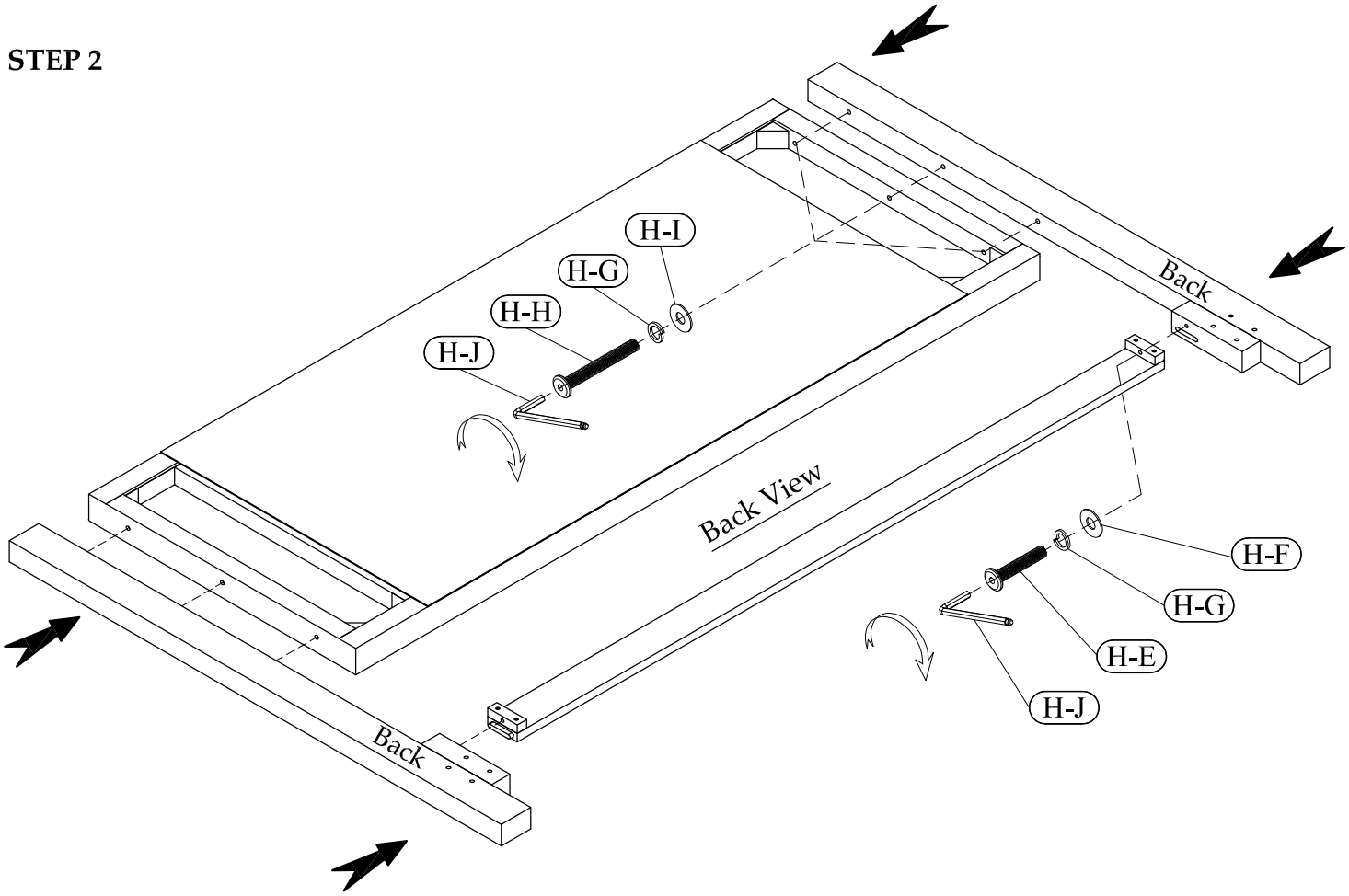

Riverside FURNITURE
email: info@riverside-furniture.com

Rosalie Bedroom Assembly Instructions

Made in Viet Nam

King Woven Bed

STEP 3

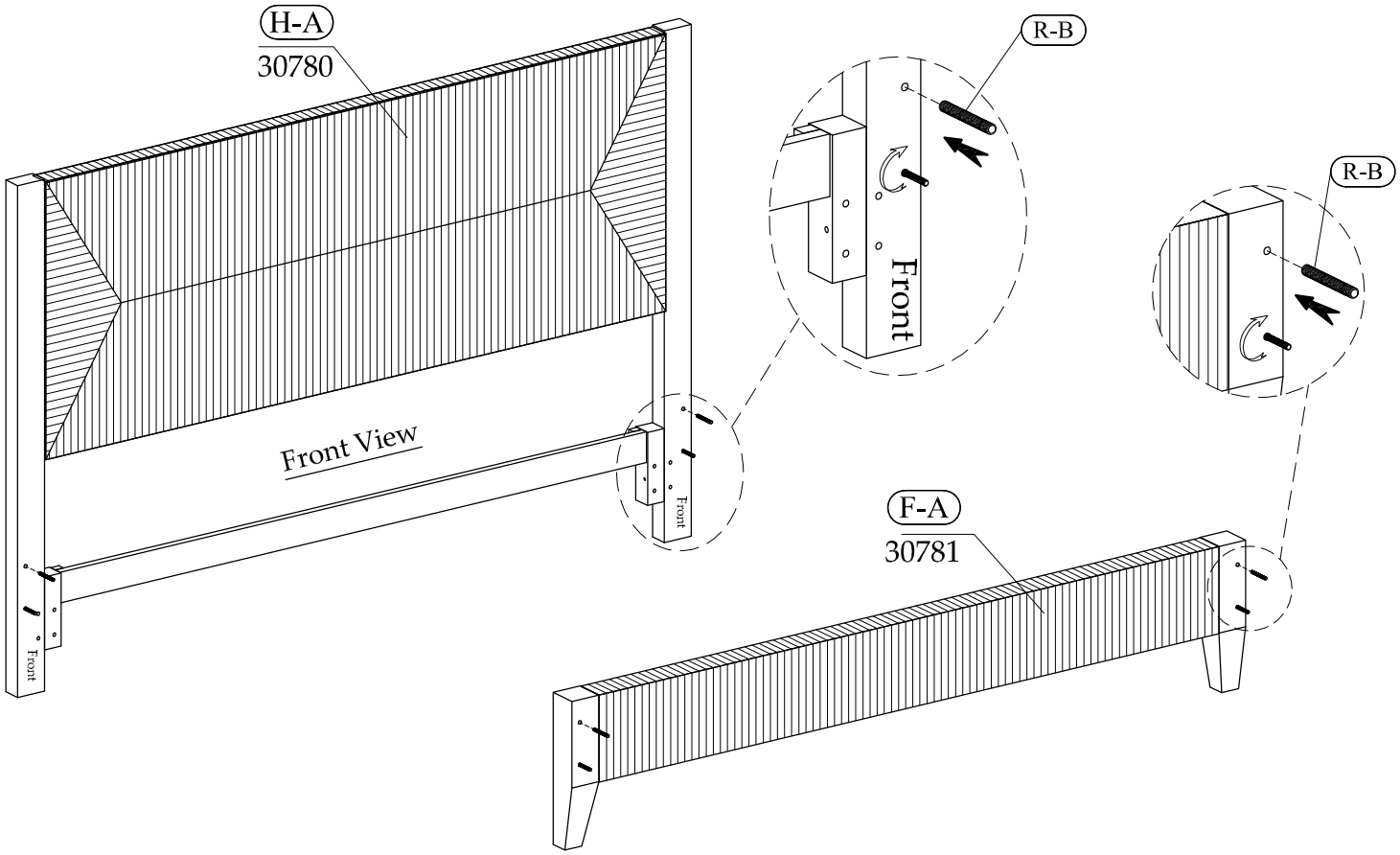

STEP 4

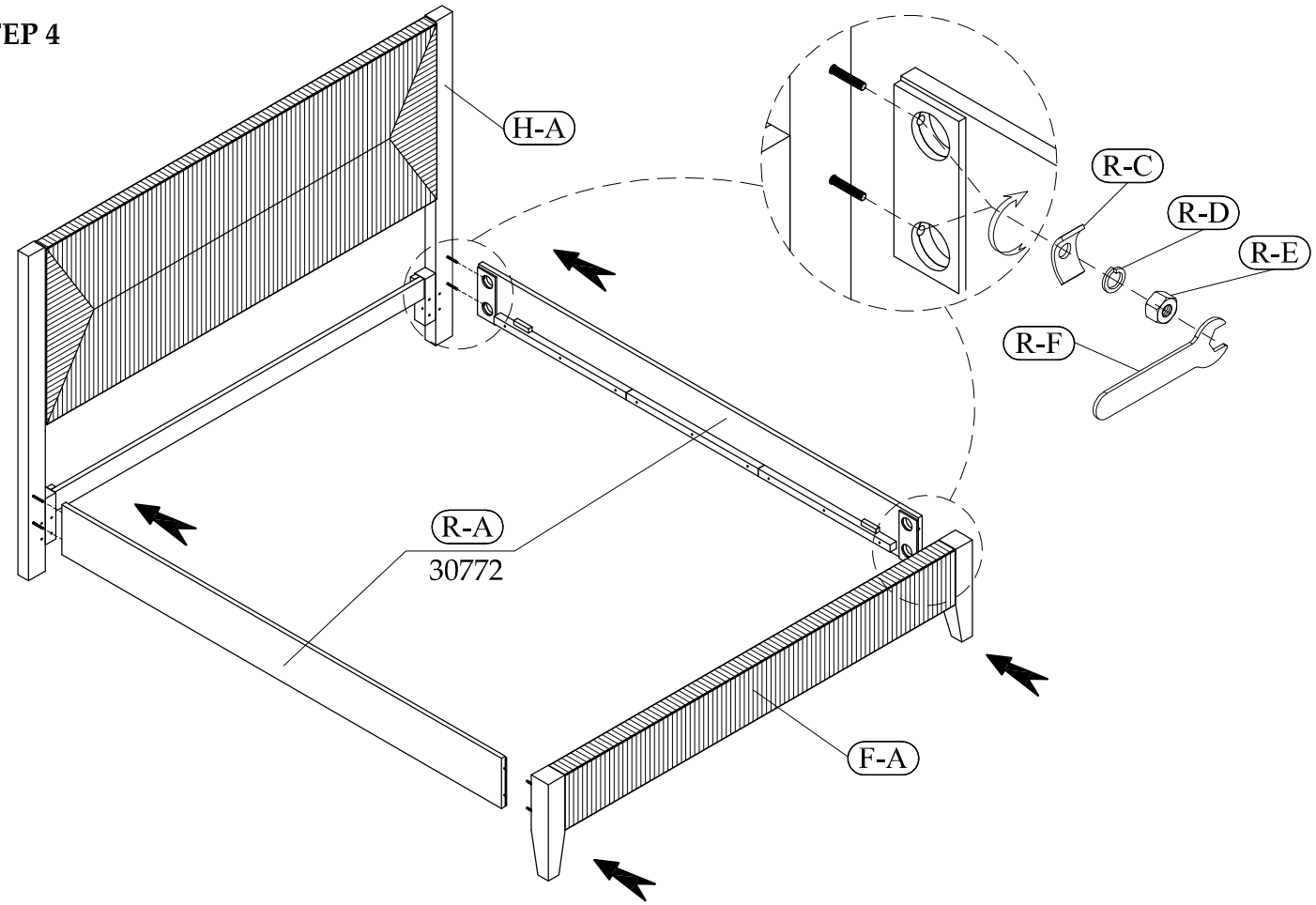

Riverside FURNITURE
email: info@riverside-furniture.com

Rosalie Bedroom Assembly Instructions

Made in Viet Nam

King Woven Bed

STEP 5

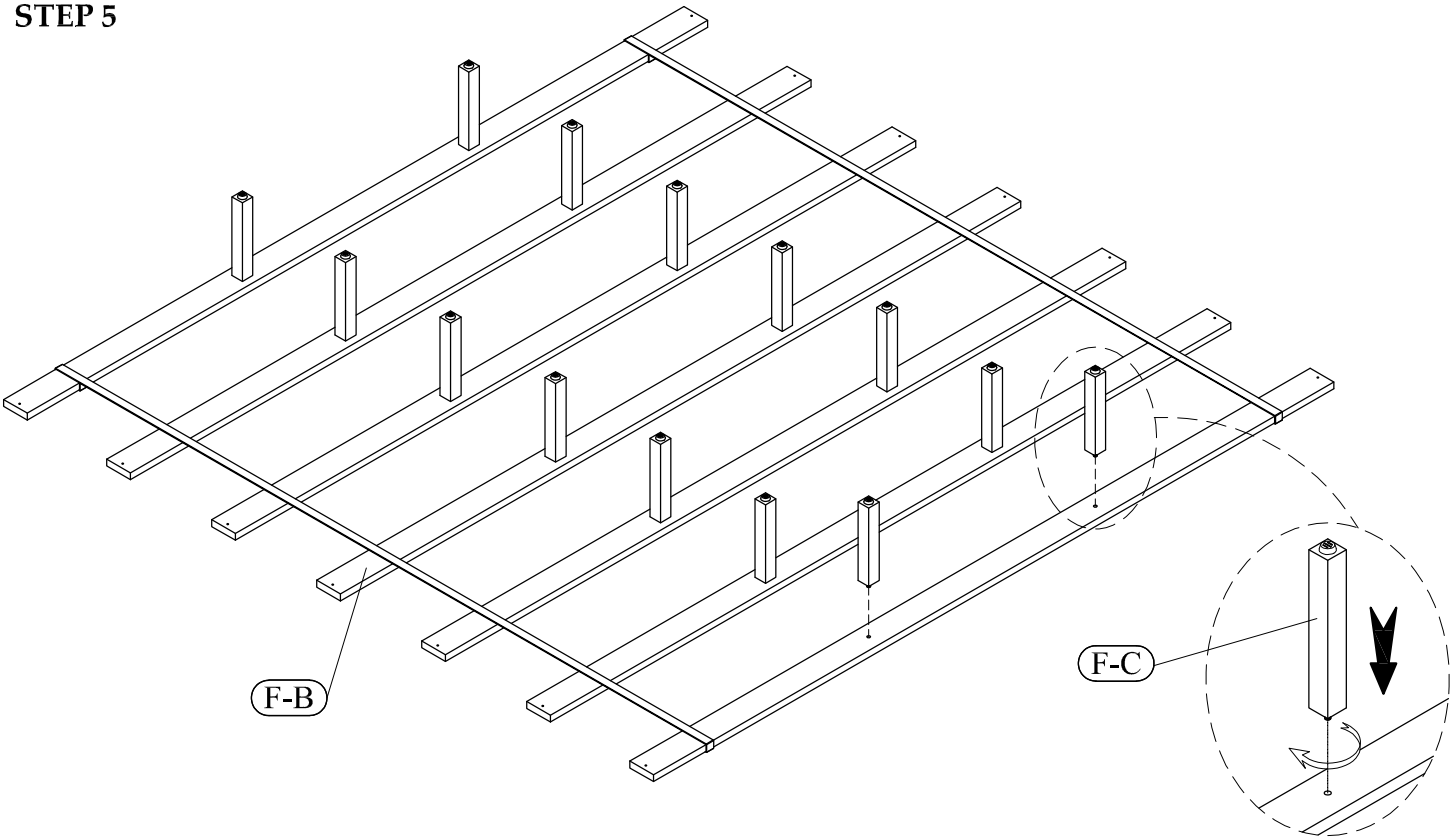

STEP 6

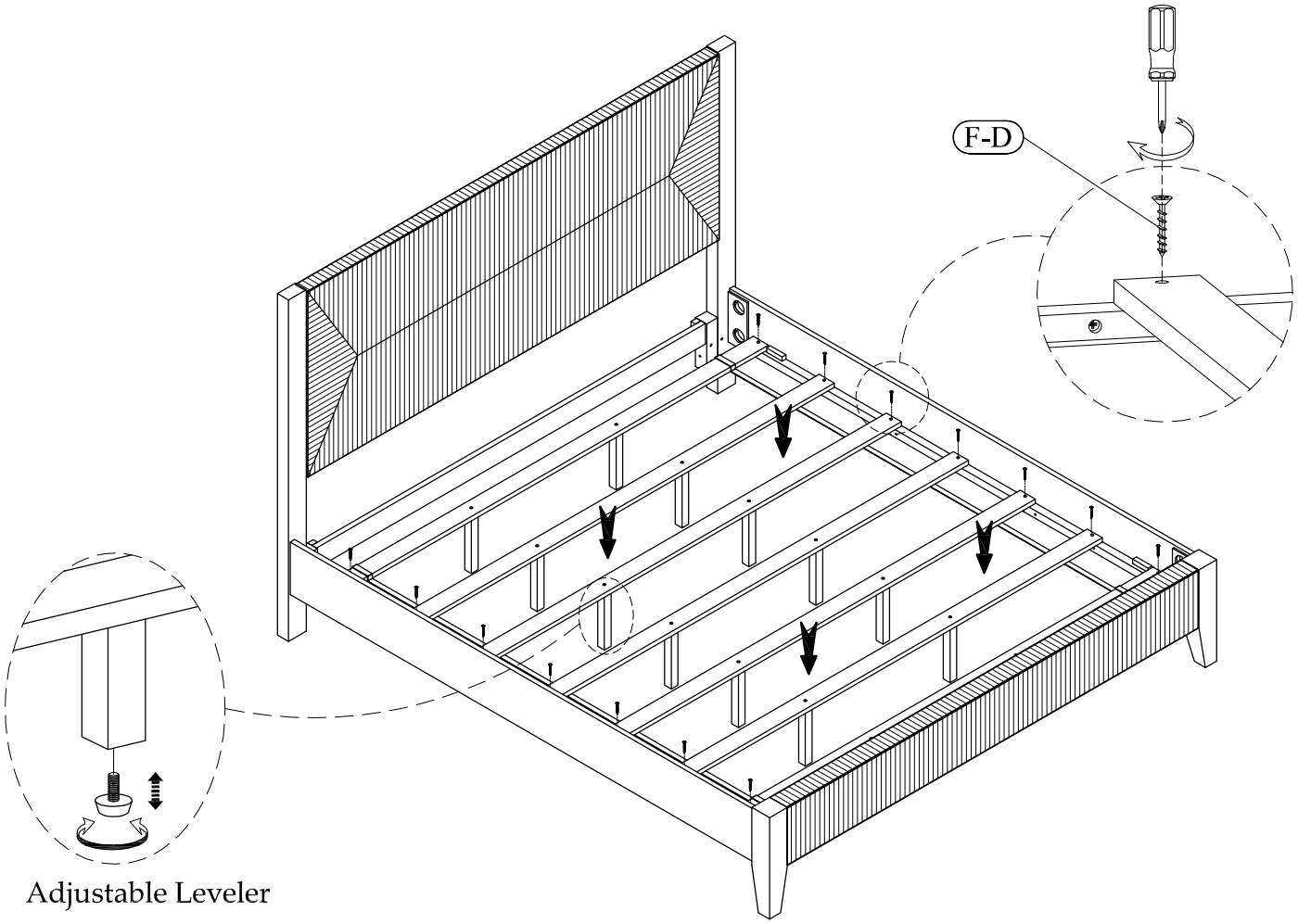

Riverside FURNITURE
email: info@riverside-furniture.com

Rosalie Bedroom Assembly Instructions

Made in Viet Nam

King Woven Bed

6/6 King Bed
30780 - 6/6 Woven Headboard

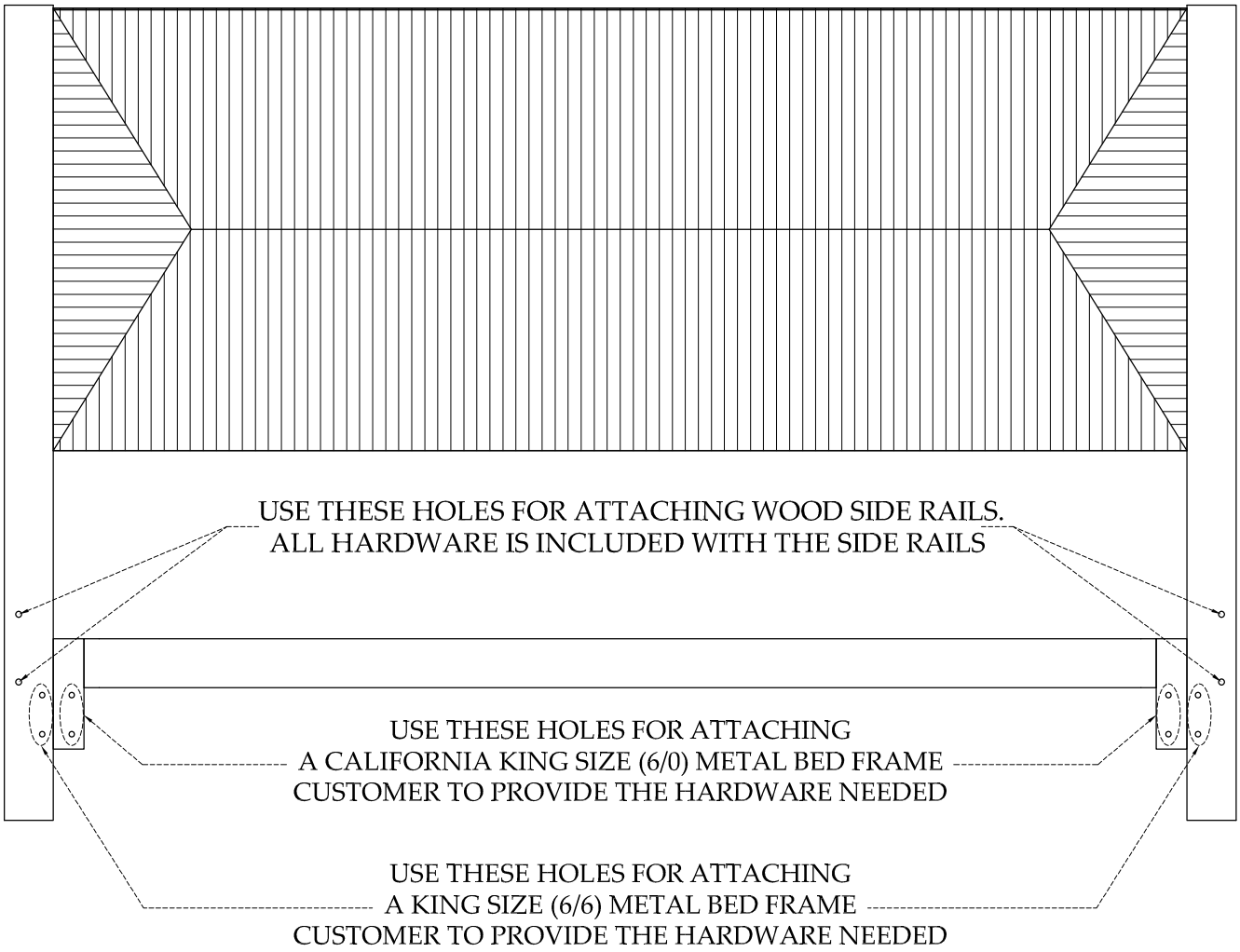

THE HEADBOARD MAY BE USED ALONE WITH
A EASTERN KING OR CALIFORNIA SIZE METAL BED FRAME