Use & Care
MANUAL

5 SERIES

Professional Indoor & Outdoor Hoods

VWH53012 / VWH53612
VWH53048 / VWH53648 / VWH54248
VWH54848 / VWH56048
VCWH53048 / VCWH53648 / VCWH54248
VCWH54848 / VCWH56048
VCIH53608 / VCIH54208 / VCIH55408 / VCIH56608
VBCV53638 / VBCV54238 / VBCV54838 / VBCV56038 / VBCV56038
VWHO3678 / VWHO4878 / VWHO6078 (Canadian Outdoor models not applicable)

Congratulations

Your purchase of a Viking Range hood attests to the importance you place upon the quality and performance of the major appliances you use. With minimal care, as outlined in this guide, your new hood is designed to provide you with years of reliable service. Please take a few minutes to learn about its proper and efficient use and care.

This guide will provide you with the information you need to become familiar with your hood's care and operation.

Your complete satisfaction is our ultimate goal. If you have any questions or comments about this product, please contact the dealer from whom you purchased it, or contact our Consumer Support Center at 1-888-845-4641.

We appreciate your choosing a Viking Range, LLC product, and hope that you will again select our products for your other major appliance needs.

For more information about the complete and growing selection of products, visit us online at vikingrange.com

Table of Contents

Getting Started

Before Using Hood 2

Warnings 3

Product Controls/Operation

Settings and Functions 5

Hood Operation 5

Using Outdoor Models 5

Product Care

Cleaning and Maintenance 6

Baffle Filters 6

Charcoal Filters 7

Hood Canopy 7

Enamel Finish 7

Stainless Steel Finish 7

Ductless Venting Chamber 7

Light Bulbs 8

Service Information 9

Warranty 10

Before Using Hood

Although the hood is cleaned upon completion of the manufacturing process, you will probably need to clean your hood again after installation. Wipe the surface of the hood with a good household cleaner applied with a soft cloth, or stainless steel polish, depending on the finish of your hood. This will leave a protective finish on the hood.

READ AND SAVE THESE INSTRUCTIONS

⚠ WARNING

To reduce the risk of fire, electric shock, or injury when using your unit, observe the following:

- **Installation work and electrical wiring must be done by qualified person(s) in accordance with all applicable codes and standards, including fire-rated construction.**
- **Sufficient air is needed for proper combustion and exhausting of gases through the flue (chimney) of fuel burning equipment to prevent back drafting. Follow the heating equipment manufacturer's guideline and safety standards such as those published by the National Fire Protection Association (NFPA), and the American Society for Heating, Refrigeration and Air Conditioning Engineers (ASHRAE), and the local code authorities.**
- **When cutting or drilling into wall or ceiling, do not damage electrical wiring and other hidden utilities.**
- **Ducted fans must always be vented to the outdoors.**
- **WARNING!: To reduce the risk of fire, use only metal ductwork.**
- **CAUTION!: To reduce risk of fire and to properly exhaust air, be sure to duct air outside. Do not vent exhaust air into spaces within walls or ceilings, or into attics, crawl spaces, or garages.**

⚠ WARNING

To reduce the risk of fire, electric shock, or injury to persons, observe the following:

- **Use this unit only in the manner for which it is intended. If you have any questions, contact the manufacturer.**
- **Before servicing or cleaning unit, switch power off at service panel and lock service panel to prevent power from being switched on accidentally. When the service disconnecting means cannot be locked, securely fasten a prominent warning device, such as a tag, to the service panel.**

⚠ WARNING

TO REDUCE THE RISK OF FIRE, ELECTRICAL SHOCK, OR INJURY TO PERSONS, RANGEHOODS MUST BE INSTALLED WITH THE VENTILATORS THAT ARE SPECIFIED ON THEIR CARTON INDICATING SUITABILITY WITH THIS MODEL. OTHER VENTILATORS CANNOT BE SUBSTITUTED.

⚠ WARNING

TO REDUCE THE RISK OF A RANGETOP GREASE FIRE:

1. **Never leave surface units unattended at high setting. Boilovers cause smoking and greasy spillovers that may ignite. Heat oils slowly on low or medium settings.**
2. **Always turn hood ON when cooking at high heat or when cooking flaming foods. (i.e. Crepes suzette, Cherries jubilee, Peppercorn beef flambé).**
3. **Clean ventilating fans frequently. Grease should not be allowed to accumulate on fan or filter.**
4. **Use proper pan size. Always use cookware appropriate for the size of the surface element.**

⚠ WARNING

To reduce the risk of injury to persons in the event of a rangetop grease fire, observe the following: (Based on "Kitchen Firesafety Tips," published by NFPA.)

1. **SMOTHER FLAMES with a close fitted lid, cookie sheet, or metal tray, then turn off the burner. BE CAREFUL TO PREVENT BURNS. If the flames do not go out immediately, EVACUATE AND CALL THE FIRE DEPARTMENT.**
2. **NEVER PICK UP A FLAMING PAN. You may be burned.**
3. **DO NOT USE WATER, including wet dishcloths or towels a violent steam explosion will result.**
4. **Use an extinguisher ONLY if**
   - **You know it is a Class ABC extinguisher, and you already know how to operate it.**
   - **The fire is small and contained in the area where it started.**
   - **The fire department is being called.**
   - **You can fight the fire with your back to an exit.**

⚠ CAUTION

For general ventilating use only.
- **DO NOT use to exhaust hazardous or explosive materials and vapors.**
- **DO NOT flambe under the hood.**

⚠ CAUTION

If the power to the hood is not disconnected during cleaning, the heat sensor thermostat can cause the blower to turn on.

⚠ CAUTION

Unplug power cords from control panel before cleaning or servicing hood.

⚠ CAUTION

DO NOT place flammable material on warming shelves when using heat lamps.

⚠ CAUTION

Do not use a porcelain cleaner or rough abrasive cleaner.

⚠ CAUTION

Accessible parts may become hot when used with cooking appliance.
- **Children should be supervised to ensure that they do not play with the appliance.**
- **This appliance is not intended for use by persons (including children) with reduced physical sensory or mental capabilities, or lack of experience and knowledge, unless they have been given supervision or instruction concerning use of the appiance by a person responsible for their safety.**

⚠ CAUTION

This appliance is not to be used by persons (including children) with reduced physical, sensory or mental capabilities, or lack of experience and knowledge, unless they have been given supervision or instruction concerning the use of the appliance by a person responsible for their safety. Children should be supervised to ensure that they do not play with the appliance.

Settings and Functions

Hood Operation

Always turn on your hood before you begin cooking to establish airflow in the kitchen. Also let the blower run for a few minutes to clear the air after you turn off your cooking appliance. This will help keep the kitchen air cleaner.

Indoor Hoods

ON/OFF - Blower speed knob—Starts and stops the blower. Push in on the knob to allow it to pop out. Turn the knob clockwise to increase the blower speed and counter clockwise to decrease speed. 0 is off, 1 is lowest speed, and 5 is the highest speed. The type of cooking you are doing will dictate the speed of the blower you use.

Light On/Off / Dimmer knob —Controls the 8-watt LED lights located in the front of the hood. Push in on the knob to allow it to pop out. Turn the knob clockwise to brighten the halogen lights and counter clockwise to dim the lights.. O is off, 1 is dimmest and 5 is the brightest.

Heat lamp switches— Push to turn the heat lamps on and off.

Each professional 18" H. wall hood will be equipped with one or two heat lamp outlets. The 250-watt infrared bulbs are not included and should be purchased locally.

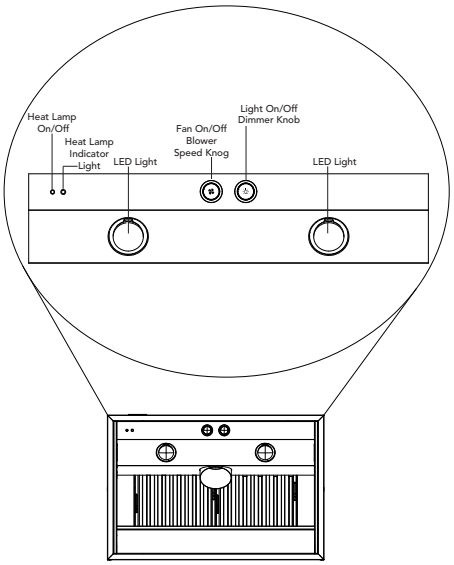

Using Outdoor Hoods

- Outdoor hood models should be installed in a covered yet non-enclosed area. They should also be protected from natural elements (such as rain) as much as possible.
- Always turn the outdoor hood on to the "HIGH" position before lighting the grill.
- Keep the grill canopy closed as much as possible when cooking so smoke is exhausted from the back of the grill. This allows for optimum performance of the hood.
- During breezy conditions, outdoor hoods may not perform well.

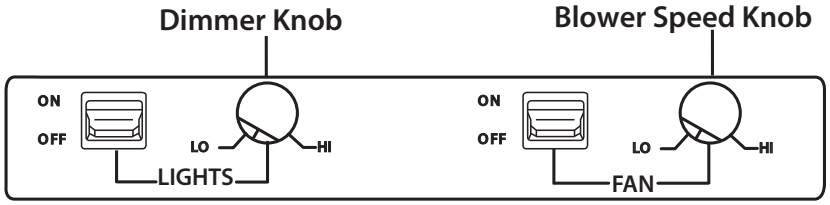

Fan On/Off switch—Starts and stops the blower. When turned on the blower will operate at the previous setting of the speed control.

Blower speed knob—Turn the knob counterclockwise to decrease the blower speed and clockwise to increase speed. The type of cooking you are doing will dictate the speed of the blower you use.

Light switch—Controls the 50-watt halogen lights located in the front of the hood.

Dimmer knob—Turn the knob clockwise to brighten the halogen lights and counterclockwise to dim the lights.

⚠ CAUTION

Unplug power cords from control panel before cleaning or servicing hood.

Any piece of equipment works better and lasts longer when maintained properly and kept clean. Ventilation equipment is no exception. Your hood must be kept clean and maintained properly.

Cleaning Baffle Filters

As air passes through a baffle filter, grease particles collect on the stainless steel U-shaped baffle channels and drip down into the bottom of the filter. Baffle filters are extremely efficient when compared to mesh filters. The power of the hood is increased as more air passes through a baffle filter than with mesh filters, which are usually dirty. Baffle filters are almost universally required in commercial installations due to their superior ability to capture grease. The baffle filters should be examined periodically to assure that all surfaces and parts are clean. The filters can be washed in a dishwasher or in a sink with hot, soapy water. Simple periodic cleaning will ensure maximum filter effectiveness.

- Do not use caustic detergent to clean the filters. An abrasive or corrosive cleaner may damage the finish.
- Do not take the baffle filters apart to clean them. It is not necessary and will void the filter warranty.

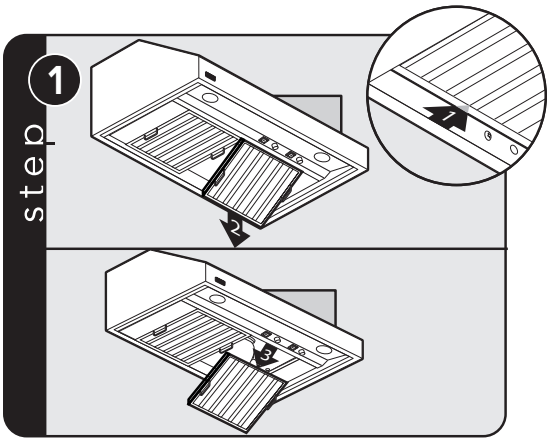

Slide filter forward off of rear lip. Lower filter rear, then slide filter front out.

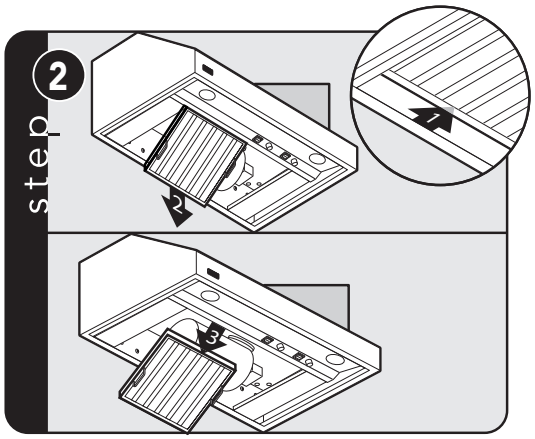

Slide filter forward off of rear lip. Lower filter rear, then slide filter front out.

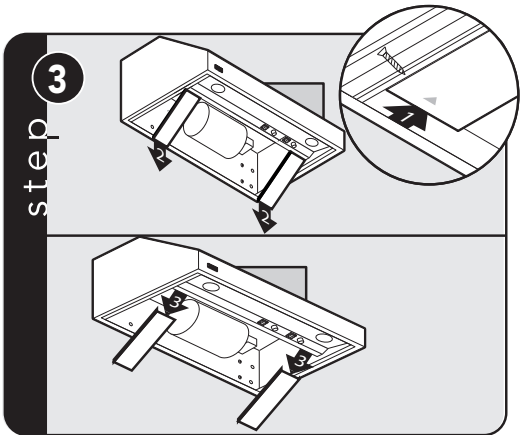

Remove the screws located on the side at the top and bottom of each spacer and slide spacer forward off of rear lip. Lower spacer rear, then slide spacer front out.

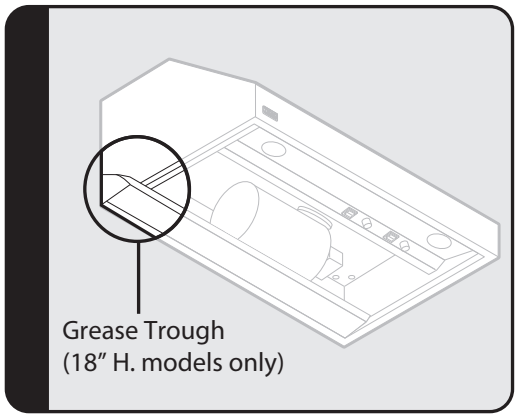

When cleaning filters in 18"H. hoods, always remove the grease trough and clean by soaking in a sink with hot soapy water.

Maintaining Charcoal Filter (Recirculating Hoods Only)

Replace the charcoal filters every 6 months to 1 year depending on the amount and type of cooking you do.

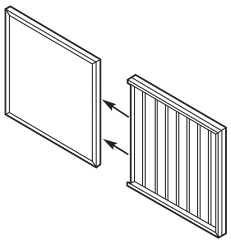

To replace, remove the baffle/charcoal filter assembly and slide the charcoal filter out of the channel and replace with a new one. Do not put the charcoal filters in the dishwasher.

Replacement filters are available through your local Viking Range dealer, or you can call the Viking Online Store at 1-877-834-8222 or visit vikingrange.com.

⚠ CAUTION

For general ventilating use only. DO NOT use to exhaust hazardous or explosive materials and vapors.

Cleaning Hood Canopy

Finishes in enamel or stainless steel are highly resistant to damage or discoloration due to grease, steam, and heat—provided that reasonable care is given to the equipment. The following suggestions will help keep your hood looking new.

1. Do not allow an excessive accumulation of grease. For best results, you should wipe your hood clean with a cloth dipped in warm, soapy water. DO NOT USE ABRASIVE CLEANSERS, STEEL WOOL PADS, OR ABRASIVE CLOTHS. DO NOT use cleansers that contain chlorides; the chlorides in the cleaner could damage the stainless steel finish. If you need to scrape stainless steel to remove encrusted materials, first soak the area with hot towels to loosen the material, then use a wooden or nylon spatula or scraper. DO NOT use a metal knife, spatula, or any other metal tool to scrape stainless steel.
2. Every 3 months give your hood a thorough cleaning. On painted surfaces, use a new coat of wax. A good wax cleaner—available at either a grocery or hardware store—will do both jobs at once. On stainless steel surfaces, use a good stainless steel cleaner and polish.

⚠ CAUTION

Do not use a porcelain cleaner or rough abrasive cleaner.

Renewing Enamel Finish

If discoloration occurs, you should thoroughly polish the finish on your hood to renew its gloss and luster and to remove any grease residue which may have a yellowing effect. Use any good enamel polish, refrigerator polish, or automotive polish.

Renewing Stainless Steel Finish

Regular cleaning is the best way to assure that your stainless steel finish stays bright and unscratched. Use lemon oil or stainless steel polish to coat and protect stainless steel.

Cleaning Ductless Venting Chamber (Professional Hoods Only)

1. Remove the middle vent by gently raising up and pulling out.
2. Use the same cleaning directions as in "Cleaning the Hood Canopy" section.
3. After cleaning, replace the middle vent.

Replacing the Light Bulbs

When removing bulbs use an oven mitt to protect your hand in case the bulb breaks.

Cleaning and Maintenance

LED Lights - Indoor Models
1. Unscrew bulb.
2. Replace the bulb with a 120 volt, Phillips R20 8-watt LED bulb (8R20/F90 2700 DIM). Can be purchased locally.

Halogen Lights - Outdoor Hoods
1. Unscrew halogen bulb.
2. Replace the bulb with a 120 volt, 50-watt halogen bulb.

Infrared Heat Lamp
1. Unscrew infrared bulb from heat lamp socket.
2. Replace the bulb with an R40, 120 volt, 250-watt infrared bulb. (not included with product)

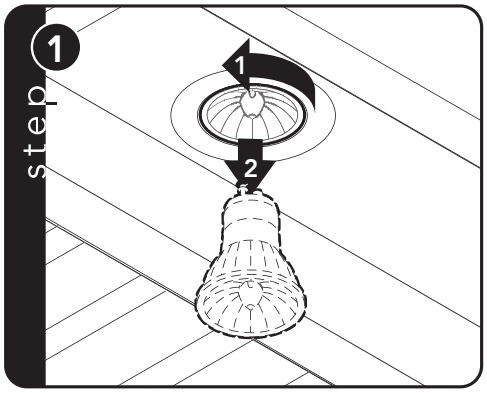

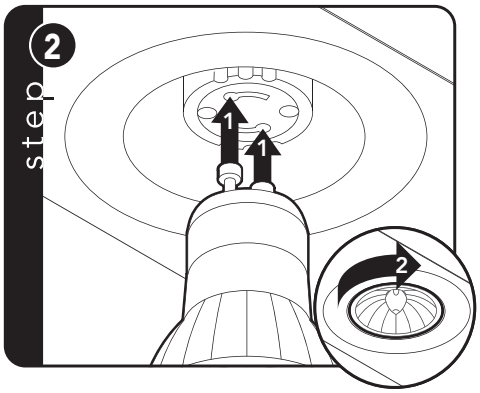

Service Information

If service is required, call your authorized service agency.

Have the following information readily available.

- Model number
- Serial number
- Date purchased
- Name of dealer from whom purchased

Clearly describe the problem that you are having. If you are unable to obtain the name of an authorized service agency, or if you continue to have service problems, contact Viking Range, LLC at 1-888-845-4641, or write to:

VIKING RANGE, LLC
PREFERRED SERVICE
111 Front Street
Greenwood, Mississippi 38930 USA

Record the information indicated below. You will need it if service is ever required. The model and serial number for your hood is located behind the baffle filter on the left side panel in the lower right corner.

Model no. _____ Serial no. _____

Date of purchase _____ Date installed _____

Dealer's name _____

Address _____

_____

If service requires installation of parts, use only authorized parts to ensure protection under the warranty.

THIS MANUAL SHOULD REMAIN WITH THE HOOD FOR FUTURE REFERENCE.

HOOD WARRANTY
TWO YEAR FULL WARRANTY

Hoods and all of their component parts, except as detailed below*, are warranted to be free from defective materials or workmanship in residential housed hold use for a period of two (2) years from the date of original retail purchase. Viking Range, warrantor, agrees to repair or replace at its option, any part which fails or is found to be defective during the warranty period. Warranty service must be performed by a Viking Range LLC authorized service agency or representative.

*90 Day Cosmetic Warranty: Products are warranted to be free from cosmetic defects in material or workmanship for a period of 90 days from the date of original retail purchase. This warranty covers manufacturing based defects only and does not cover issues resulting from handling or installation. Inspection of the product should be made at time of delivery. Any defects must be reported to the selling dealer within the 90 day period. Viking Range LLC uses the most up to date processes and the best materials available to produce all color finishes. However, slight color variation may be noticed because of the inherent differences in painted parts and porcelain parts as well as differences in product location and natural or artificial lighting. Warranty service must be performed by a Viking Range LLC authorized service agency or representative.

*90 Day Residential Plus: Viking products are designed and certified for residential use only. They are not intended for use in commercial applications. Viking products should only be used in accordance to national and local codes. Viking is not responsible for property damage or injury resulting from use in a commercial application. To support the manufacturing quality of its appliance's Viking will provide a full 90 day warranty for products used in "Residential Plus "applications. This "Residential Plus" warranty applies to applications where use of the product extends beyond residential use but is in compliance with national and local code. In some jurisdictions these applications are zoned as residential. Examples of, but not limited to, such applications covered by this warranty are bed and breakfasts, fire stations, private clubs, churches, condominium/apartment common areas etc. Under this "Residential Plus" warranty, the product, its components and accessories are warranted to be free from defective material or workmanship for a period of ninety (90) days from the date of original retail purchase. Viking Range, LLC, warrantor, agrees to repair or replace, at its option, any part which fails or is found to be defective during the warranty period. This warranty covers parts and labor. This warranty excludes use of the product in all commercial locations such as restaurants, food service locations and institutional food service locations.

FIVE YEAR LIMITED WARRANTY

Any ventilator motor which fails due to defective materials or workmanship in normal residential use during the third thru the fifth year from the date of original retail purchase will be repaired or replaced free of charge for the part itself, with the owner paying all other costs, shipping, handling and labor. Aesthetic conditions such as corrosion, scratching, discoloration, carbon/food build up or similar blemishes due to normal wear and tear or improper use or lack of maintenance is excluded from this warranty.

WARRANTY TERMS

This warranty extends to the original retail purchaser of the product warranted hereunder and to each transferee owner of the product during the term of the original purchaser's warranty. The warranty is transferable by the original retail purchaser via home sale only. If a transferee owner is unable to provide proof of purchase from the original purchaser and the product has not been previously registered, the production date of the product, located in the serial number on the product, will serve as the effective warranty start date.

The activation date of the warranty begins from the date of original retail purchase. In the case of new product purchase via building development sales, activation begins from the earlier date of either certificate of occupancy or 24 months from date of manufacture. Note date of manufacture is identified by serial tag on product.

This warranty does not cover units purchased as b-stock, liquidation, salvage, seconds, refurbished, as-is, used products.

This warranty shall apply to products purchased in the United States and Canada. Products must be purchased in the country where service is requested. Warranty service must be performed by a Viking Range LLC authorized service agency or representative. Warranty shall not apply to damage resulting from abuse, accident, natural disaster, loss of electrical power to the product for any reason, alteration, improper installation, improper operation, or repair service of the product by anyone other than a Viking Range LLC authorized service agency or representative. This warranty does not apply to commercial usage. Warrantor is not responsible for consequential or incidental damage whether arising out of breach of warranty, breach of contract or otherwise. Some jurisdictions do not allow the exclusion or limitation of incidental or consequential damages, so the above limitations do not apply to you.

Owner shall be responsible for proper installation, providing normal care and maintenance, providing proof of purchase upon request, and making the product reasonably accessible for service. If the product or one of its component parts contains a defect or malfunction during the warranty period, after a reasonable number of attempts by the warrantor to remedy the defects or malfunctions, the owner is entitled to either a refund or replacement, at the warrantor's discretion of the product or its component part or parts. Warrantor's liability on any claim of any kind, with respect to the goods or services covered hereunder, shall in no case exceed the price of the goods or service or part thereof which gives rise to the claim.

WARRANTY SERVICE

Under the terms of this warranty, service must be performed by a Viking Range LLC authorized service agent or representative. Service will be provided during normal business hours Labor performed at overtime or premium rates shall not be covered by the warranty. To obtain warranty service contact Viking Range LLC Customer Care at 1-888-845-4641. Please have model number, serial number, and date of original purchase available when calling. IMPORTANT: retain proof of original purchase to establish warranty period. The return of the owner registration card is not a condition of warranty coverage. You should, however, return the owner registration card so Viking Range LLC can contact you should any question of safety arise which could affect you. Any implied warranties of merchantability and fitness applicable to the above described burner assemblies, infrared rotisserie burners, grill grates, and stainless steel parts are limited in duration to the period of coverage of the applicable express written limited warranties set forth above. Some jurisdictions do not allow limitations on how long an implied warranty lasts, so the above limitations may not apply to you. This warranty gives you specific legal rights, and you may also have other rights which may vary from jurisdiction to jurisdiction.

Specifications subject to change without notice.

Viking Range, LLC
111 Front Street
Greenwood, Mississippi 38930 USA
(662) 455-1200

For product information
call 1-888-845-4641,
or visit the Viking Web site at vikingrange.com

F21286J EN (022820)