ASSEMBLY INSTRUCTION

ITEM: 6022-10458-80 Brixton Writing Desk

Thank you for purchasing this quality product. Be sure to unpack carefully looking for small parts which may have come loose during shipment.
Read all instruction and study the drawing carefully before starting the assembly process.

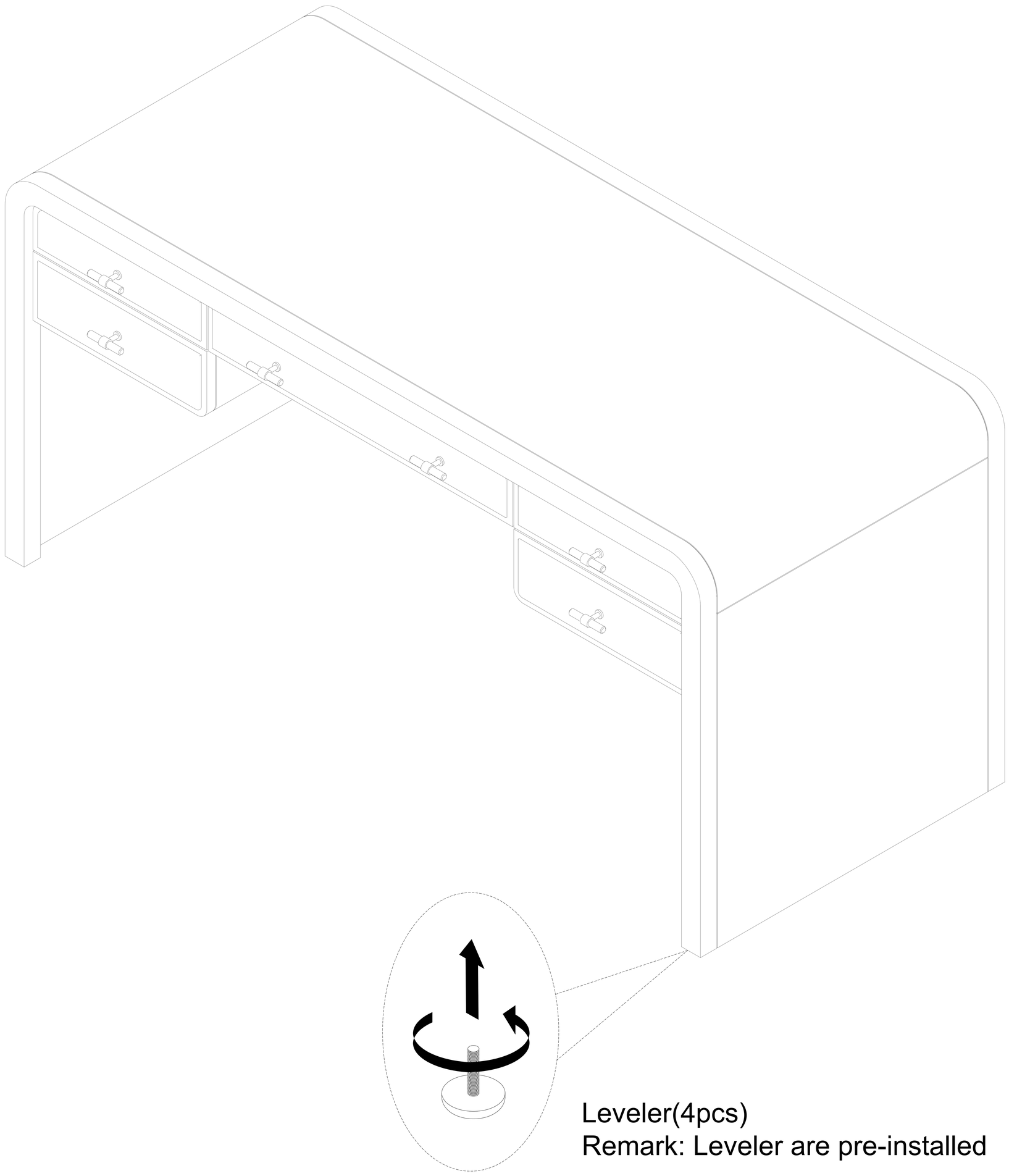

Leveler(4pcs)
Remark: Leveler are pre-installed