LEVI /MADELEINE/ROYAL/MELINA STORAGE BED
FULL/QUEEN SIZE
ASSEMBLY INSTRUCTIONS

MODUS FURNITURE

PARTS AND FITTING PACKAGING DETAIL

BOX #1

P1. HEADBOARD 1 PC
P2. HEADBOARD LEG 2 PCS

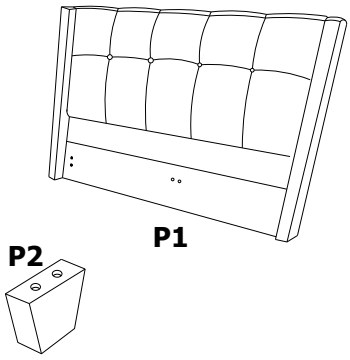

BOX #2

P3. FOOTBOARD 1 PC
P4. SIDE RAIL 2 PCS
P5. METAL SUPPORT BRACE 1 PC
P6. CENTER SLAT SUPPORT 1 PC
P7. SLAT 26 PCS
P8. FOOTBOARD LEG 2 PCS
P9. SIDE RAIL SLAT CLIP 26 PCS
P10. CENTER SUPPORT SLAT CLIP 13 PCS
P11. CENTER SUPPORT LEG 2 PCS
P12. METAL SUPPORT LEG 1 PC

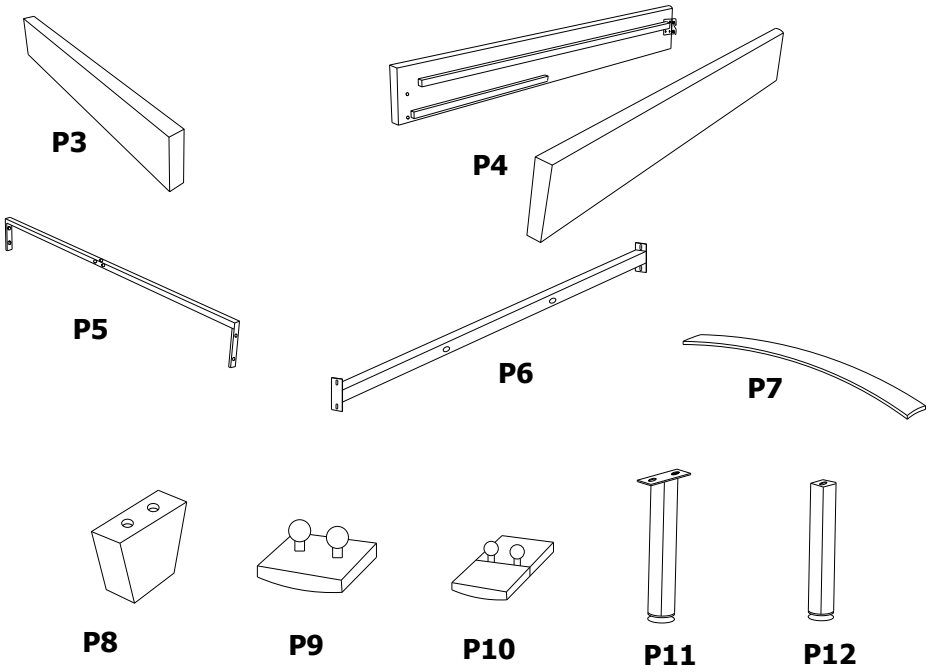

BOX #3

P13. DRAWER BOX 2 PCS

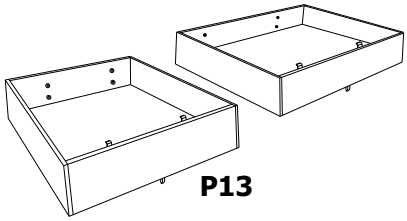

GENEVA STORAGE BED ASSEMBLED

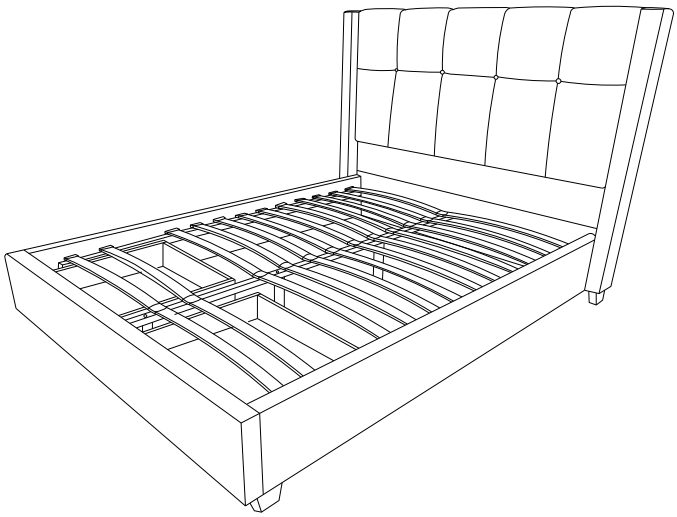

HARDWARE* PACKED IN BOX #1

A1	ALLEN KEY 5/16"	1 PC	A2	ALLEN BOLT 5/16"*3.25"	4 PCS	A3	FLAT WASHER 5/16"	4 PCS	A4	LOCK WASHER 5/16"	4 PCS
A5	ALLEN KEY 1/4"	1 PC	A6	ALLEN BOLT 1/4"*1"	8 PCS	A7	FLAT WASHER 1/4"	8 PCS	A8	LOCK WASHER 1/4"	8 PCS

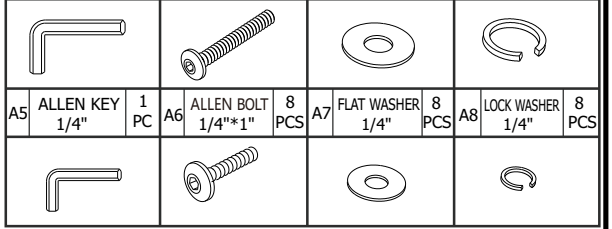

HARDWARE* PACKED IN BOX #2

B1	ALLEN KEY 5/16"	1 PC	B2	SPANNER 5/16"	1 PC	B3	ALLEN BOLT 5/16"*1"	6 PCS	B4	ALLEN BOLT 5/16"*2.5"	7 PCS
B5	ALLEN BOLT 5/16"*3.25"	2 PCS	B6	FLAT WASHER 5/16"	21 PCS	B7	LOCK WASHER 5/16"	21 PCS	B8	HEX NUT 5/16"	6 PCS

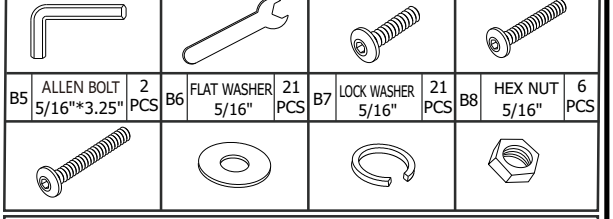

HARDWARE* PACKED IN BOX #3

C1	ALLEN KEY 1/4"	1 PC	C2	ALLEN BOLT 1/4"*1.25"	8 PCS	C3	FLAT WASHER 1/4"	8 PCS	C4	LOCK WASHER 1/4"	8 PCS
C5	ALLEN BOLT 5/16"*2.5"	4 PCS	C6	FLAT WASHER 5/16"	4 PCS	C7	LOCK WASHER 5/16"	4 PCS			

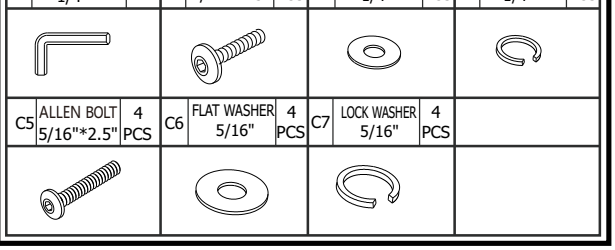

0:30

UPDATED : APRIL 21ST, 2022

STEP 1:

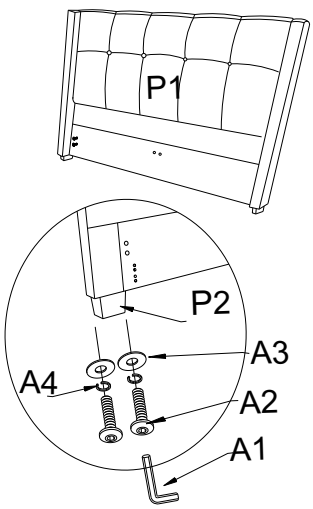

STEP 2:

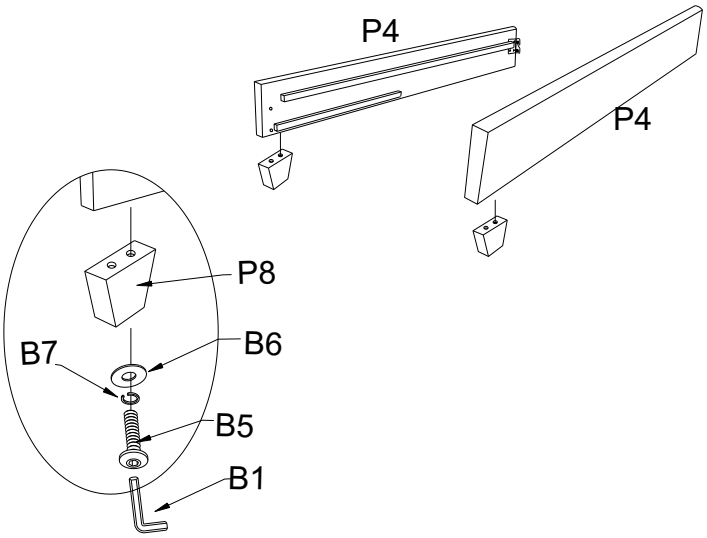

STEP 3 :

LOOSEN THE PREATTACHED BOLTS ON THE HEADBOARD AND CONNECT THE SIDE RAILS. TIGHTEN THE BOLTS WITH ALLEN KEY (B1).

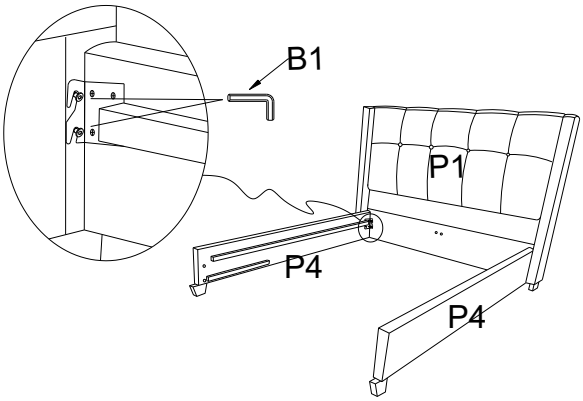

STEP 4 :

ATTACH METAL SUPPORT BRACE (P5) TO THE SIDE RAILS FOLLOWING ILLUSTRATION. TIGHTEN WITH ALLEN KEY.

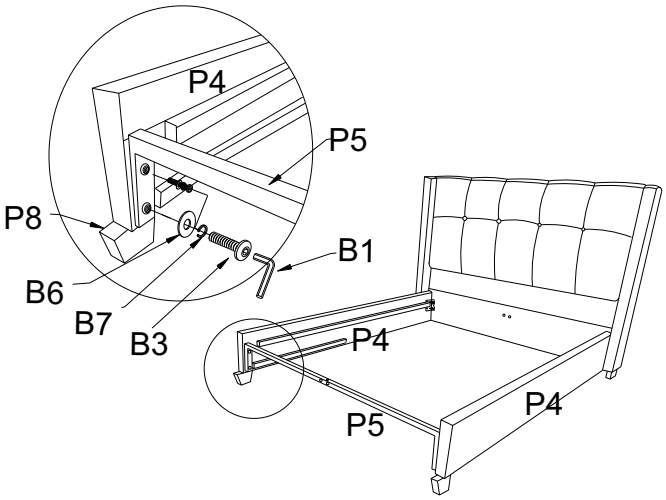

STEP 5 :

CONNECT CENTER SLAT SUPPORT (P6) TO HEADBOARD AND METAL SUPPORT BRACE FOLLOWING ILLUSTRATION.

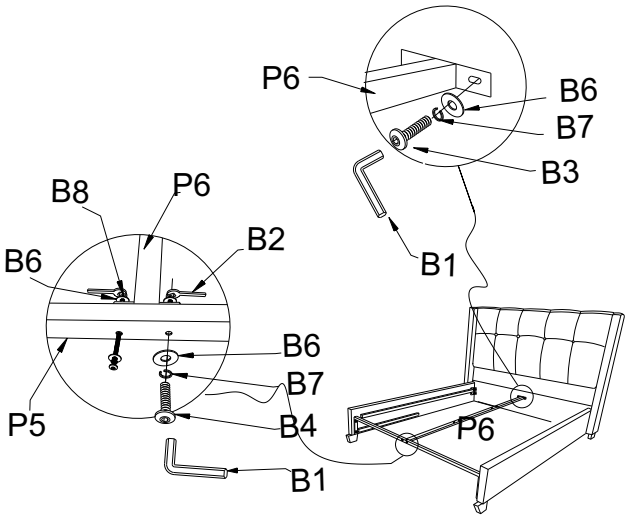

STEP 6 :

ATTACH CENTER SUPPORT LEGS (P11) TO CENTER SLAT SUPPORT. ATTACH METAL SUPPORT LEG (P12) TO METAL SUPPORT BRACE.

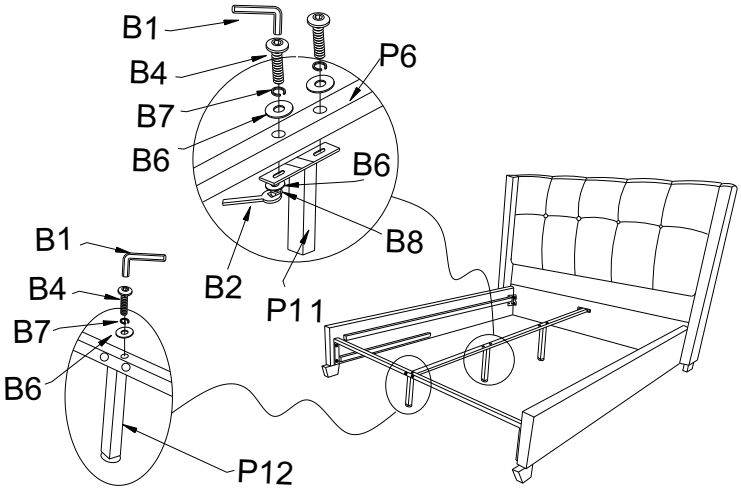

UPDATED : APRIL 21ST, 2022

STEP 7 :

ATTACH SIDE RAIL SLAT CLIPS (P9) TO SIDE RAIL. INSERT SLATS (P7) INTO SIDE RAIL CLIPS THEN CONNECT THE SLAT SECTIONS WITH CENTER SUPPORT SLAT CLIPS (P10).

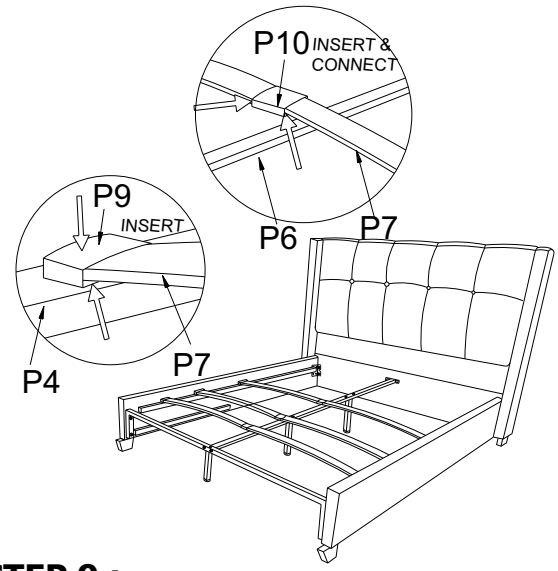

STEP 8 :

ATTACH CENTER SUPPORT CLIPS, WITH SLATS INSERTED, INTO CENTER SLAT SUPPORTS.

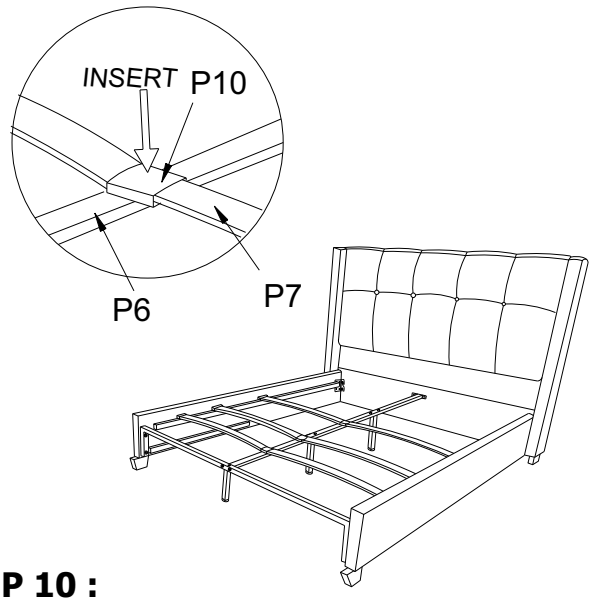

STEP 9 :

ATTACH DRAWER BOXES (P13) TO FOOTBOARD (P3) FOLLOWING THE ILLUSTRATION. TIGHTEN WITH ALLEN KEY (C1).

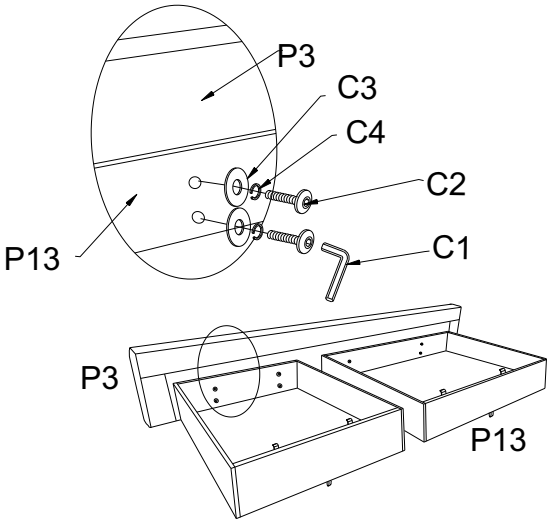

STEP 10 :

INSERT ASSEMBLED STORAGE DRAWER INTO FOOT OF BED.

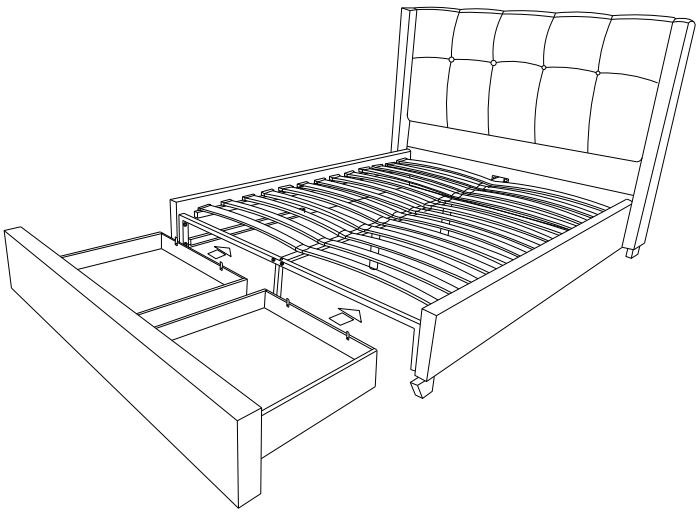

INSTRUCTIONS FOR ADJUSTING LEVELERS :

POSITION THE BED IN YOUR ROOM. LOCATE LEVELERS UNDER EACH SUPPORT LEG (P11/P12).

TURN COUNTER-CLOCKWISE TO EXTEND, CLOCKWISE TO RETRACT.

ADJUST LEVELERS UNTIL EACH LEG SUPPORT IS APPLYING EQUAL UPWARD PRESSURE ON THE CENTER SLAT.

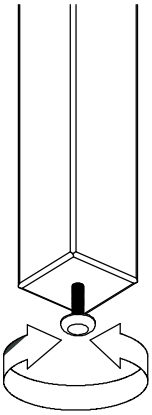

MAINTENANCE INSTRUCTIONS :

- REMOVE BOX SPRING AND MATTRESS BEFORE MOVING YOUR BED.
- LIFT YOUR BED WHEN MOVING IT. DRAGGING CAN DAMAGE CENTER SUPPORT.
- READJUST LEVELERS AFTER MOVING YOUR BED.

UPDATED : APRIL 21ST, 2022

LEVI /MADELEINE/ROYAL/MELINA STORAGE BED
C. KING/E. KING
ASSEMBLY INSTRUCTIONS

MODUS FURNITURE

PARTS AND FITTING PACKAGING DETAIL

BOX #1

P1. HEADBOARD 1 PC
P2. HEADBOARD LEG 2 PCS

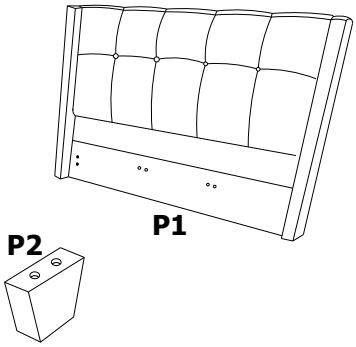

BOX #2

P3. FOOTBOARD 1 PC
P4. SIDE RAIL 2 PCS
P5. METAL SUPPORT BRACE 1 PC
P6. CENTER SLAT SUPPORT 2 PCS
P7. SLAT 39 PCS
P8. FOOTBOARD LEG 2 PCS
P9. SIDE RAIL SLAT CLIP 26 PCS
P10. CENTER SUPPORT SLAT CLIP 26 PCS
P11. CENTER SUPPORT LEG 4 PCS
P12. METAL SUPPORT LEG 1 PC

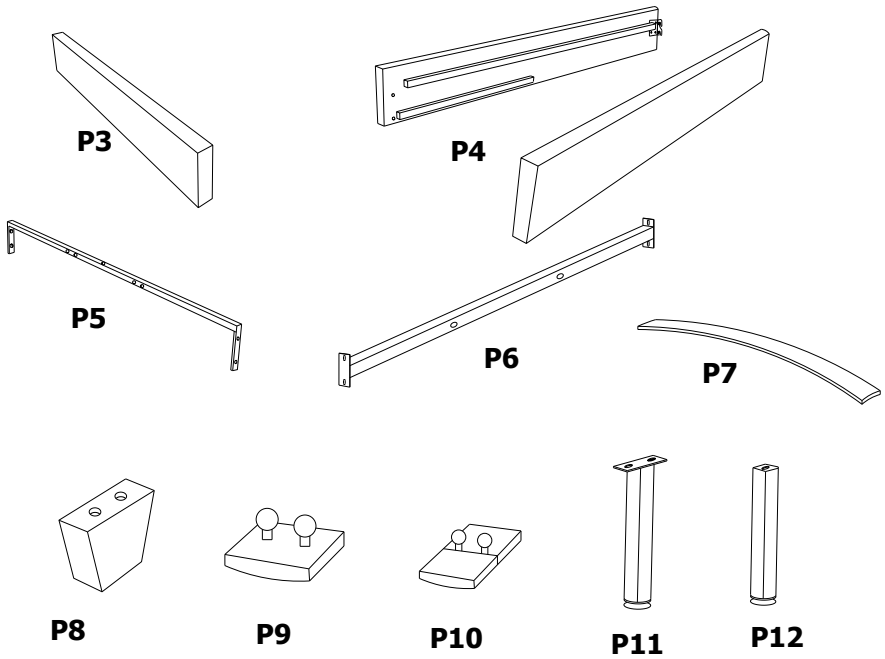

BOX #3

P13. DRAWER BOX 2 PCS

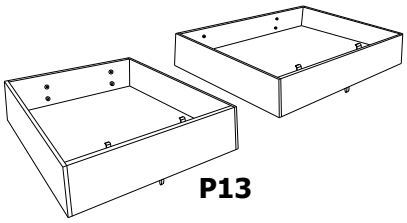

GENEVA STORAGE BED ASSEMBLED

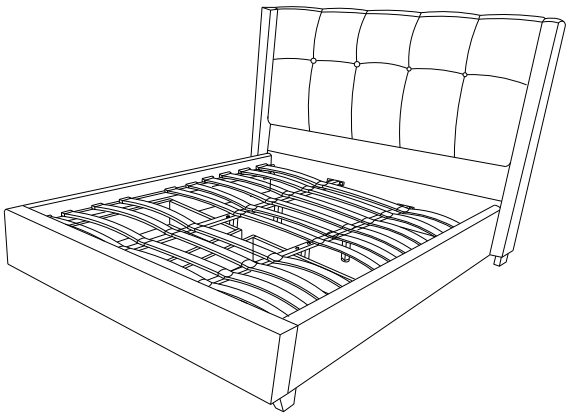

HARDWARE* PACKED IN BOX #1

A1	ALLEN KEY 5/16"	1 PC	A2	ALLEN BOLT 5/16"*3.25"	4 PCS	A3	FLAT WASHER 5/16"	4 PCS	A4	LOCK WASHER 5/16"	4 PCS
A5	ALLEN KEY 1/4"	1 PC	A6	ALLEN BOLT 1/4"*1"	8 PCS	A7	FLAT WASHER 1/4"	8 PCS	A8	LOCK WASHER 1/4"	8 PCS

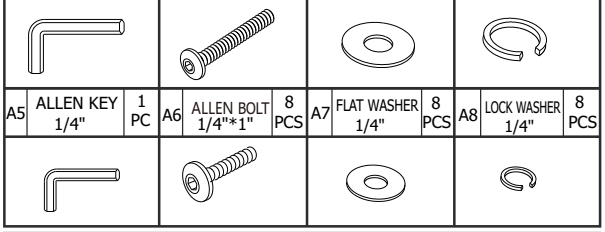

HARDWARE* PACKED IN BOX #2

B1	ALLEN KEY 5/16"	1 PC	B2	SPANNER 5/16"	1 PC	B3	ALLEN BOLT 5/16"*1"	8 PCS	B4	ALLEN BOLT 5/16"*2.5"	13 PCS
B5	ALLEN BOLT 5/16"*3.25"	2 PCS	B6	FLAT WASHER 5/16"	35 PCS	B7	LOCK WASHER 5/16"	35 PCS	B8	HEX NUT 5/16"	12 PCS

HARDWARE* PACKED IN BOX #3

C1	ALLEN KEY 1/4"	1 PC	C2	ALLEN BOLT 1/4"*1.25"	8 PCS	C3	FLAT WASHER 1/4"	8 PCS	C4	LOCK WASHER 1/4"	8 PCS
C5	ALLEN BOLT 5/16"*2.5"	4 PCS	C6	FLAT WASHER 5/16"	4 PCS	C7	LOCK WASHER 5/16"	4 PCS			

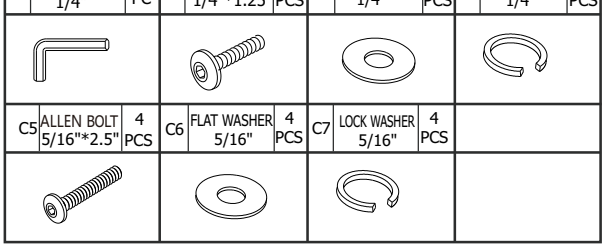

0:30

UPDATED : APRIL 21ST, 2022

STEP 1:

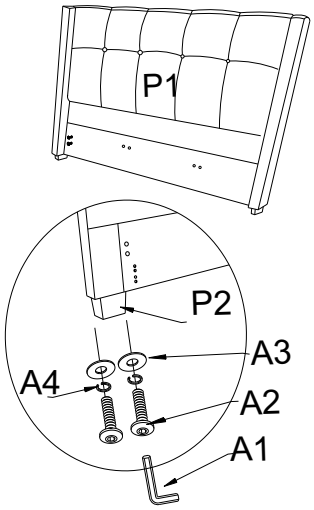

STEP 2:

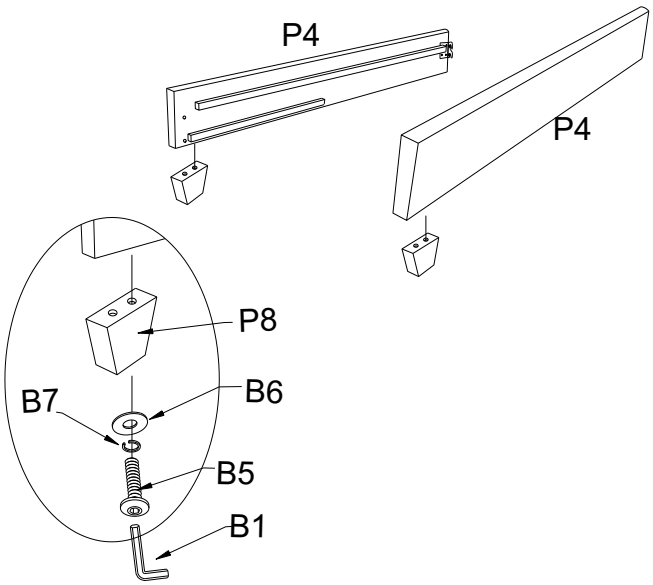

STEP 3 :

LOOSEN THE PREATTACHED BOLTS ON THE HEADBOARD AND CONNECT THE SIDE RAILS. TIGHTEN THE BOLTS WITH ALLEN KEY (B1).

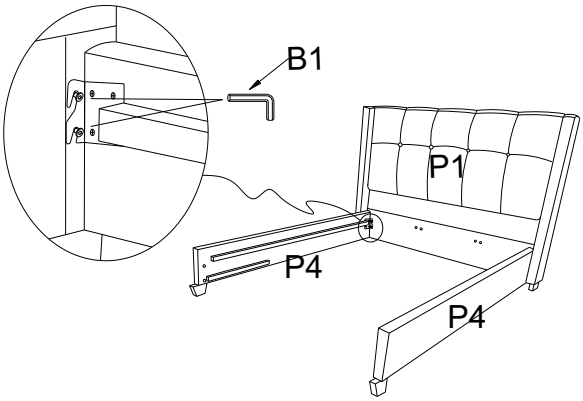

STEP 4 :

ATTACH METAL SUPPORT BRACE (P5) TO THE SIDE RAILS FOLLOWING ILLUSTRATION. TIGHTEN WITH ALLEN KEY.

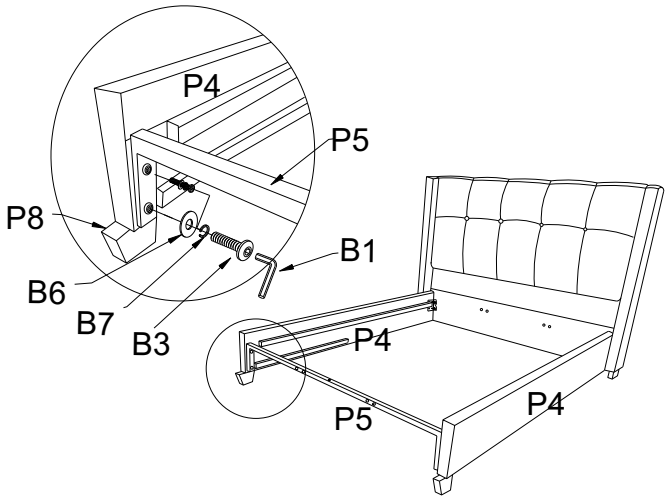

STEP 5 :

CONNECT CENTER SLAT SUPPORT (P6) TO HEADBOARD AND METAL SUPPORT BRACE FOLLOWING ILLUSTRATION.

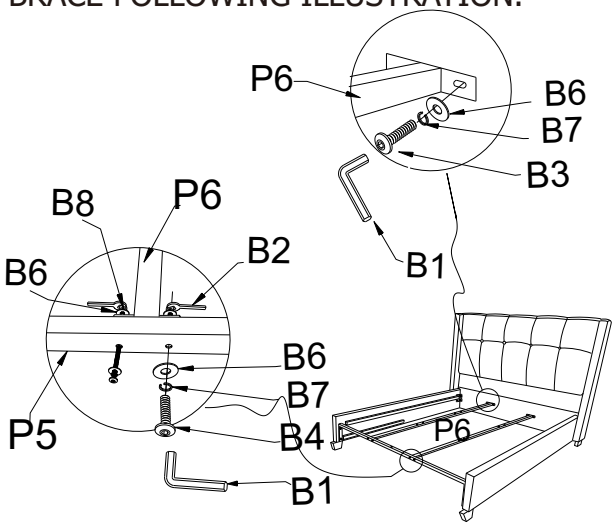

STEP 6 :

ATTACH CENTER SUPPORT LEGS (P11) TO CENTER SLAT SUPPORT. ATTACH METAL SUPPORT LEG (P12) TO METAL SUPPORT BRACE.

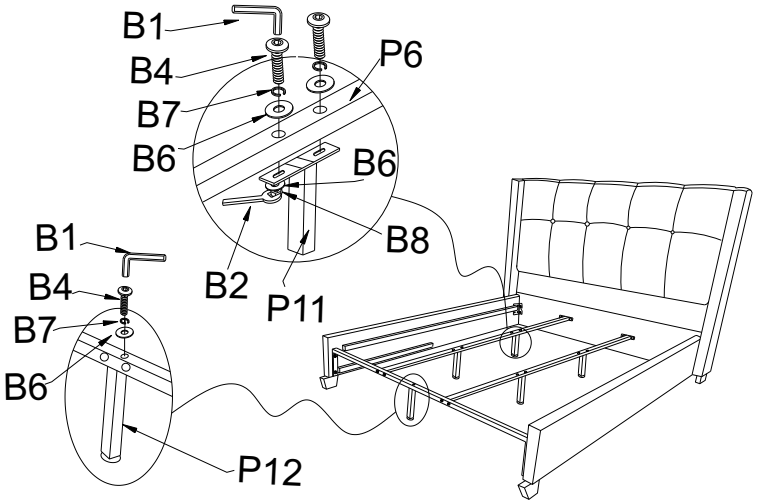

UPDATED : APRIL 21ST, 2022

STEP 7 :

ATTACH SIDE RAIL SLAT CLIPS (P9) TO SIDE RAIL. INSERT SLATS (P7) INTO SIDE RAIL CLIPS THEN CONNECT THE SLAT SECTIONS WITH CENTER SUPPORT SLAT CLIPS (P10).

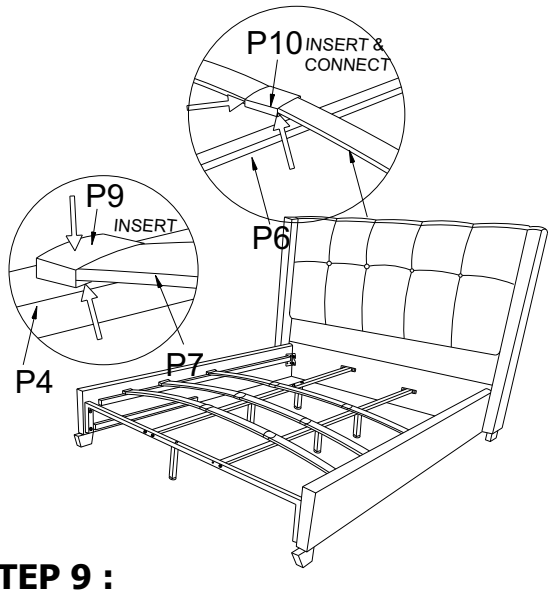

STEP 8 :

ATTACH CENTER SUPPORT CLIPS, WITH SLATS INSERTED, INTO CENTER SLAT SUPPORTS.

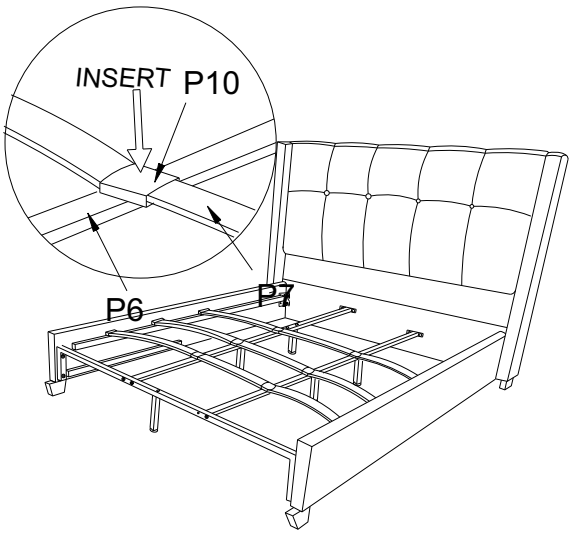

STEP 9 :

ATTACH DRAWER BOXES (P13) TO FOOTBOARD (P3) FOLLOWING THE ILLUSTRATION. TIGHTEN WITH ALLEN KEY (C1).

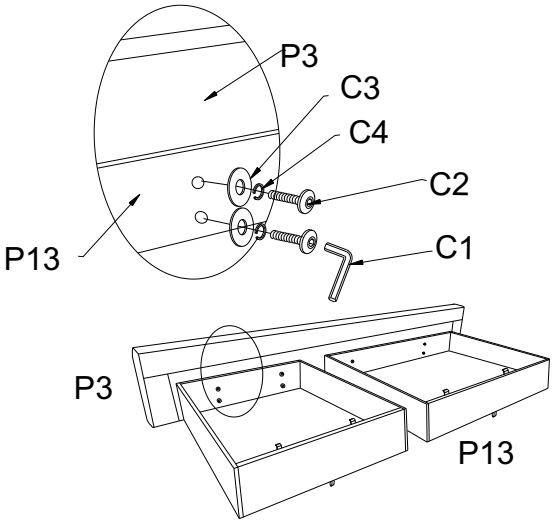

STEP 10 :

INSERT ASSEMBLED STORAGE DRAWER INTO FOOT OF BED.

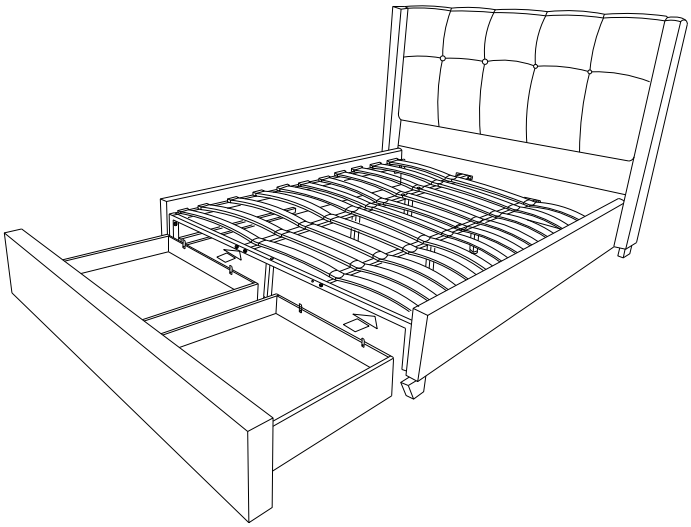

INSTRUCTIONS FOR ADJUSTING LEVELERS :

POSITION THE BED IN YOUR ROOM. LOCATE LEVELERS UNDER EACH SUPPORT LEG (P11/P12).

TURN COUNTER-CLOCKWISE TO EXTEND, CLOCKWISE TO RETRACT.

ADJUST LEVELERS UNTIL EACH LEG SUPPORT IS APPLYING EQUAL UPWARD PRESSURE ON THE CENTER SLAT.

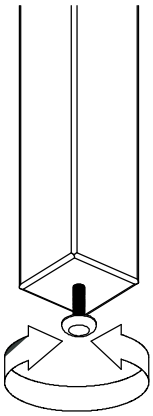

MAINTENANCE INSTRUCTIONS :

- REMOVE BOX SPRING AND MATTRESS BEFORE MOVING YOUR BED.
- LIFT YOUR BED WHEN MOVING IT. DRAGGING CAN DAMAGE CENTER SUPPORT.
- READJUST LEVELERS AFTER MOVING YOUR BED.

UPDATED : APRIL 21ST, 2022