FLEXSTEEL®

Power Reclining Loveseat with Console, Power Headrest, Lumbar, Heat & Full Body Massage

IMPORTANT NOTE

Read these instructions carefully and familiarize yourself with each procedure before assembling the furniture. Check that you have all the component parts and familiarize yourself with each part before proceeding.

Take all the fittings out of the plastic bag and separate them into groups. Ensure you have enough space to lay out all the parts before assembly. To prevent damage to the parts, we recommend that you assemble the unit on a soft, level surface.

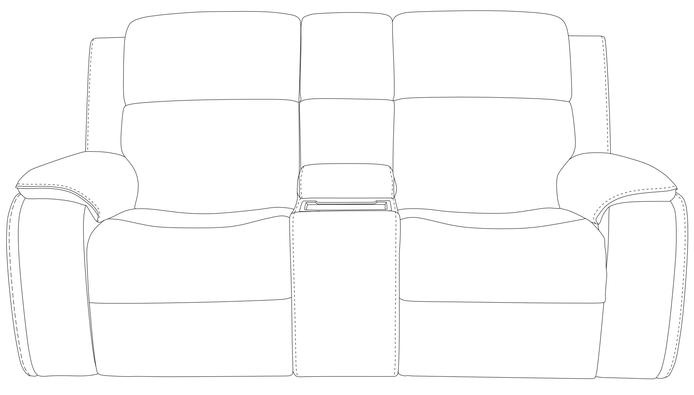

Part List

A. Left Back
1 piece

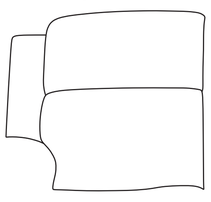

B. Right Back
1 piece

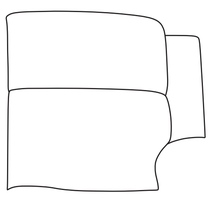

C. Console Back
1 piece

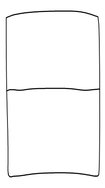

D. Seat
1 piece

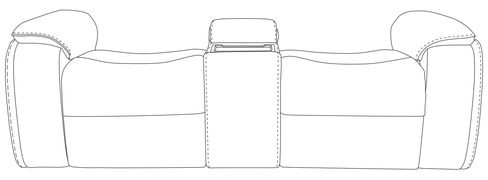

E. Transformer
2 pieces

F. AC Power Cable
2 pieces

G. Wireless Charge Transformer
1 piece

H. 58mm G1/4" Bolt
2 pieces

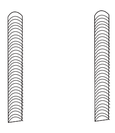

I. Handle
2 pieces

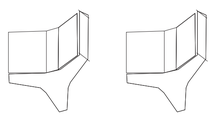

J. 1mm M8 Washer
2 pieces

Assembly Instructions

STEP 1

Detach the Transformers (E), the AC Power Cables (F), the Wireless Charge Transformer (G) and the Hardware (H I J) from the bottom of the Seat (D). (See Figure 1.)

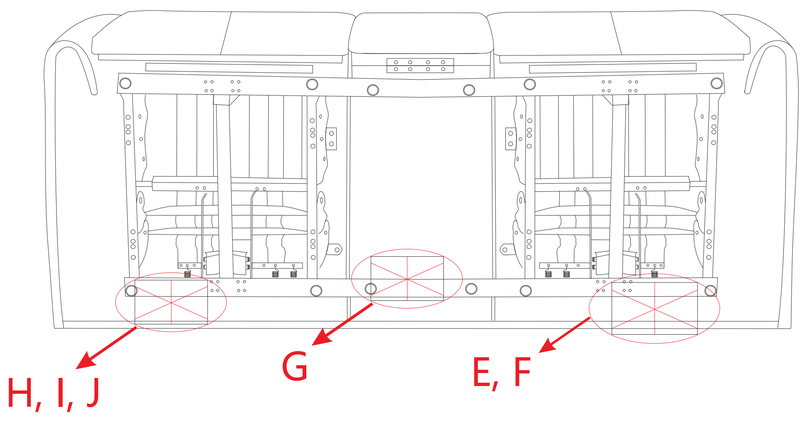

Figure 1

STEP 2

Insert the Bolts (H) into the nuts on the bottom of the Console Back (C) by turning them by hand. Set the Console Back (C) onto the top of the center console of the Seat (D), inserting the Bolts (H) through the holes on the top of the Console of the Seat (D). Slide a Washer (J) onto each bolt, then screw the Handle (I) onto each bolt. Tighten Handles (I) until the Console Back (C) is tight. (See Figure 2.)

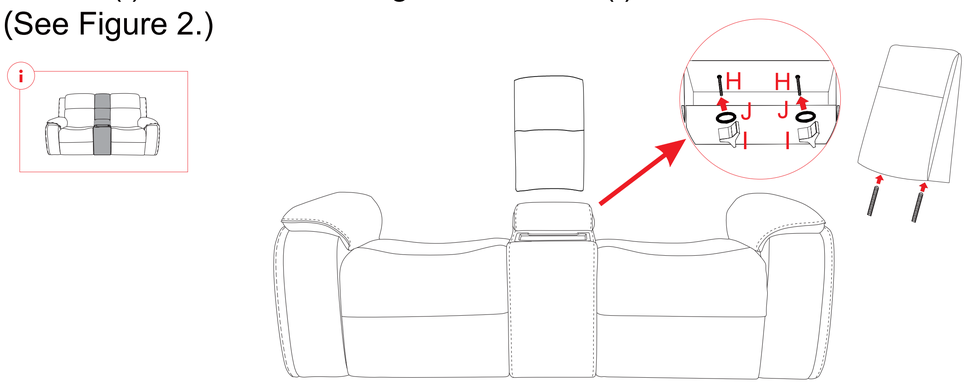

Figure 2

STEP 3

Lay the Backs (A B) face down on the Seat (D).
Zip the fabric on bottom of the Backs (A B) with back of Seat (D). (See Figure 3.)

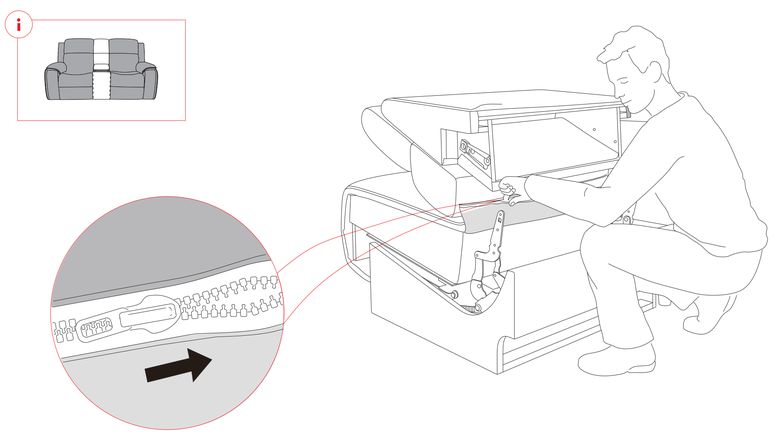

Figure 3

STEP 4

Connect the foot massage, dial switch, headrest, lumbar cables and air massage tubes between the Backs (A B) and the Seat (D). (See Figure 4.)

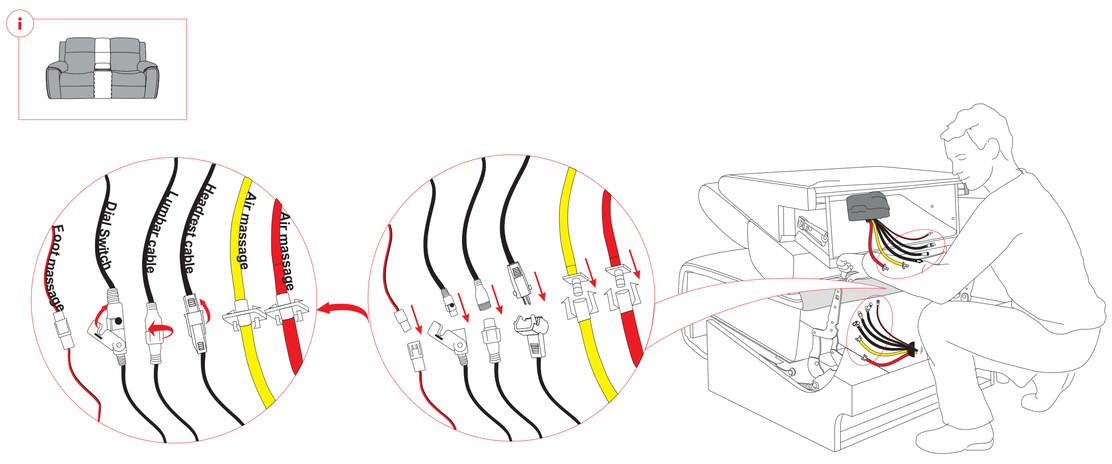

Figure 4

STEP 5

Attach the Backs (A B) to the Seat (D). Ensure the latches fit well. (See Figure 5.)

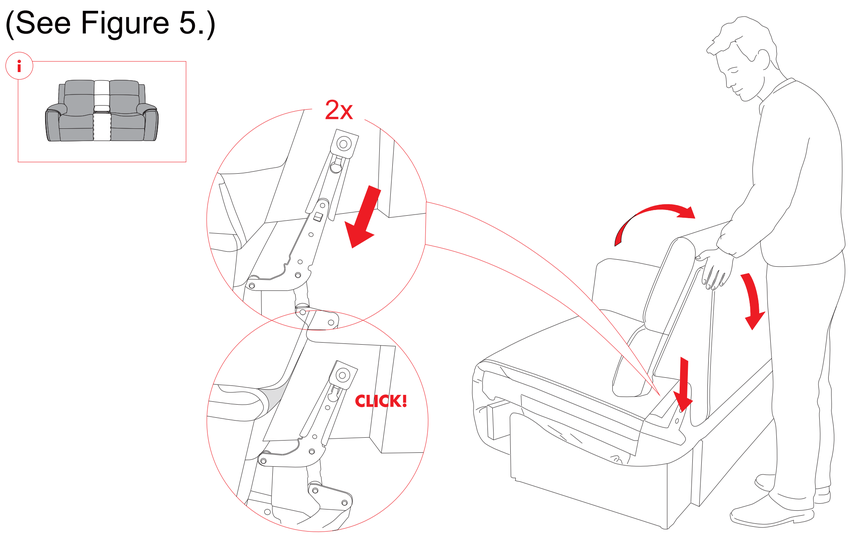

Figure 5

STEP 6

Fasten the back flaps to the bottom of the furniture. (See Figure 6.)

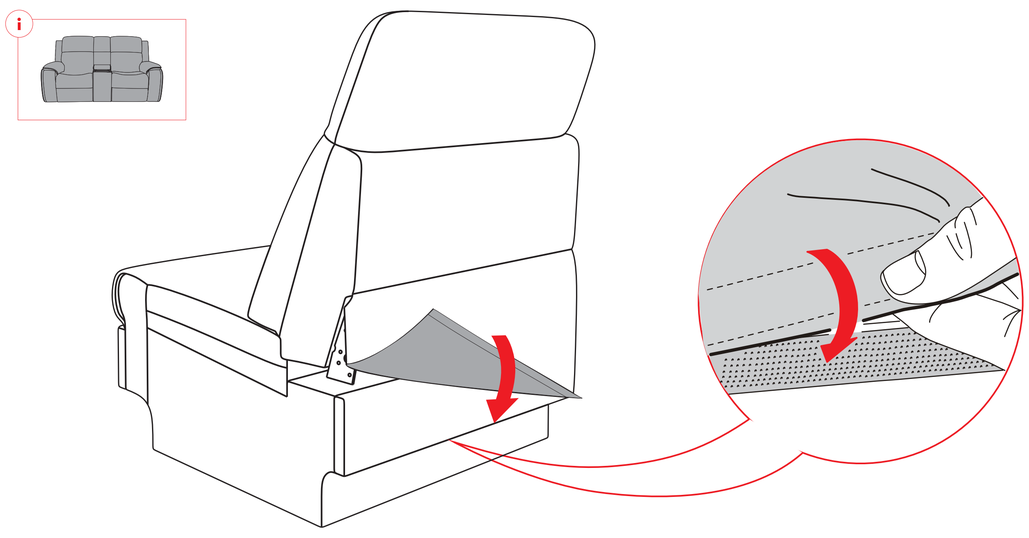

Figure 6

STEP 7

Connect the wireless charge cable to the Transformer (G).
Connect the base motor cables and AC Power Cables (F) to the Transformers (E).
Plug the Wireless Charge Transformer and AC Power Cables into nearby outlets. (See Figure 7.)

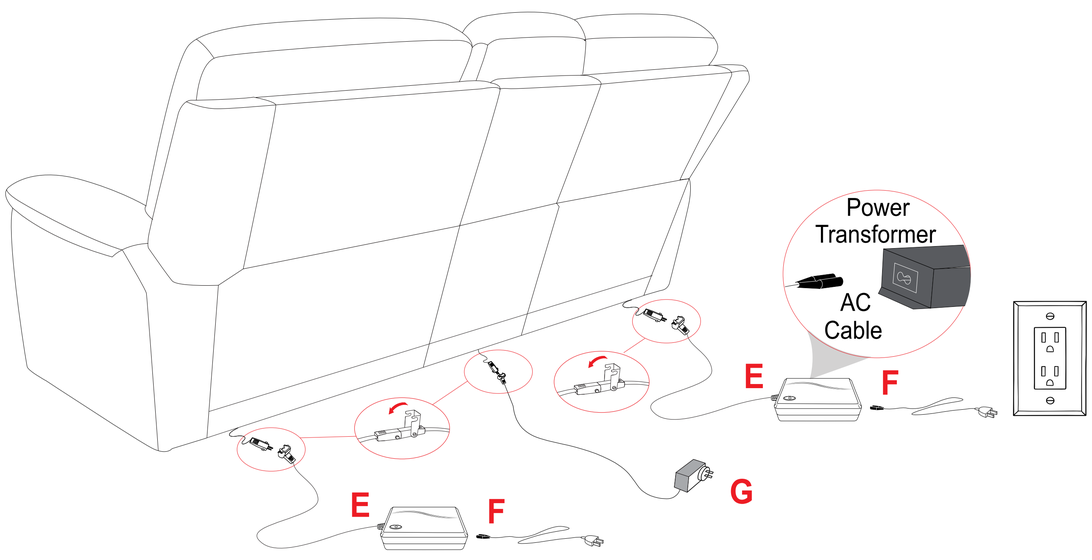

Figure 7

Disassembly Instructions

Unzip the zipper between the Backs (A B) and the Seat (D), then disconnect all the cables and air massage tubes.
Pull up the spring leaf in bracket, then lift Backs (A B) up. (See Figure 8.)

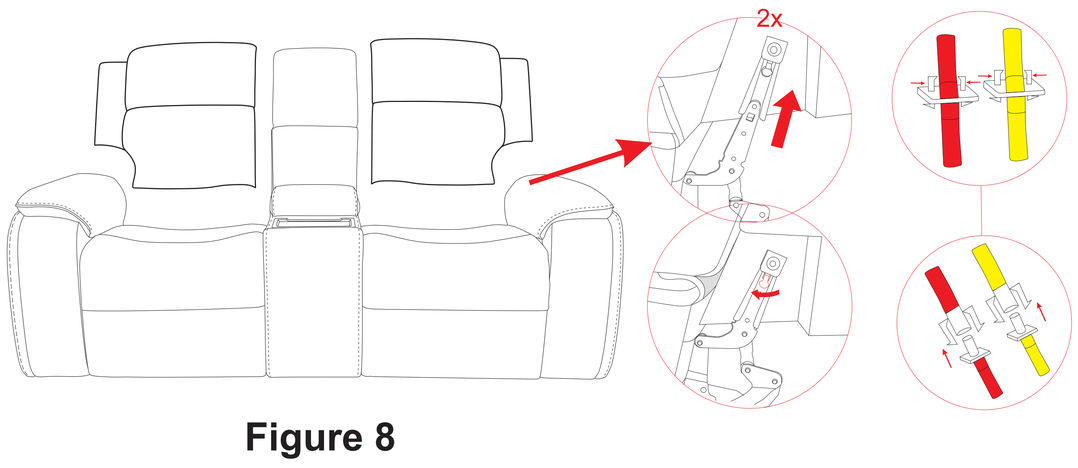

Figure 8

Hidden Cupholder and Dial Switch

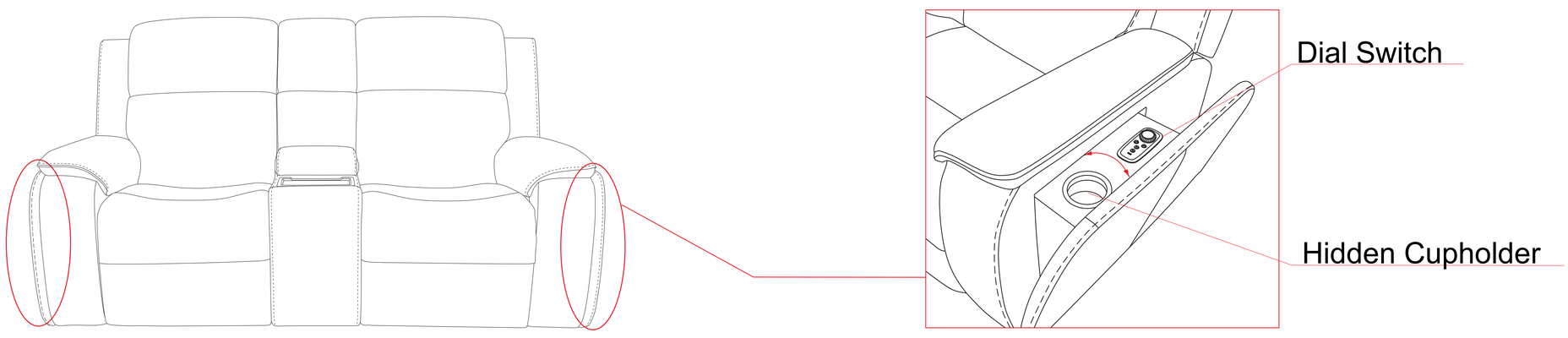

Console Base Functions

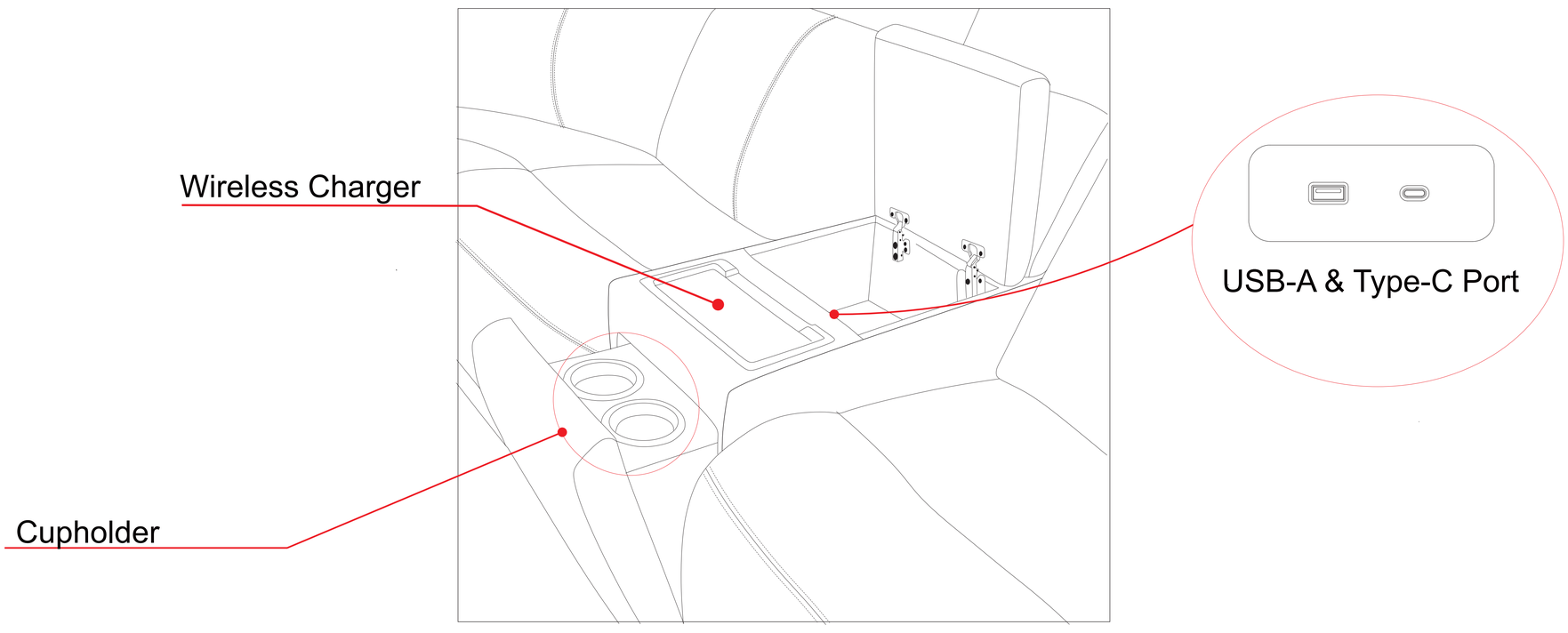

Wireless Charging Pad

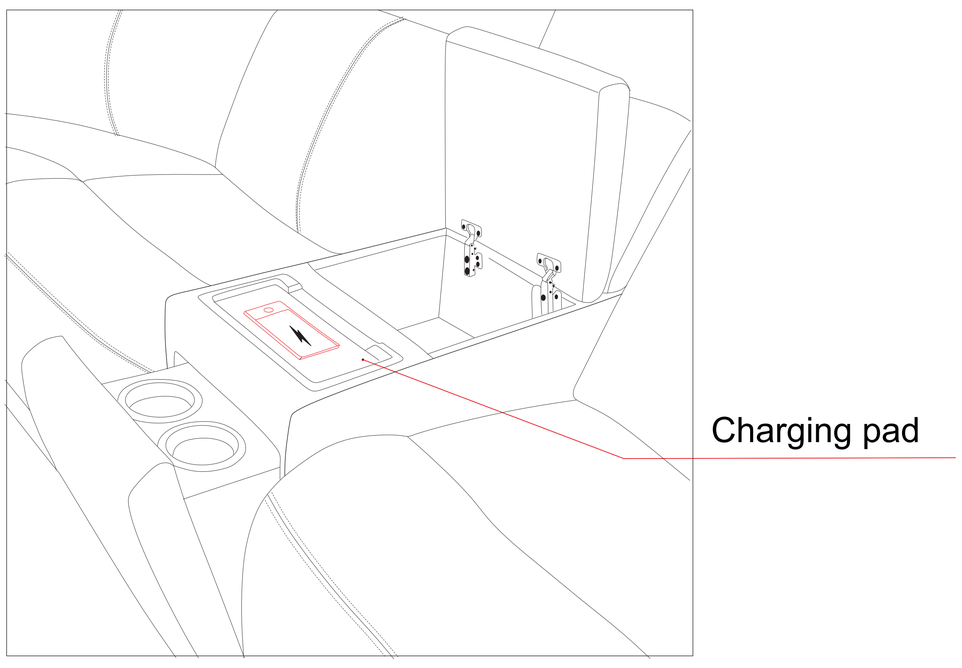

User Guide for Wireless Charger

Attention

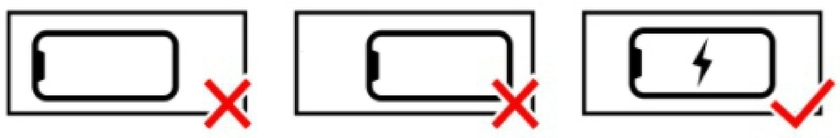

1. It is common for heat to be generated in wireless charging through the energy transfer process. This is part of the normal wireless energy transfer.
2. Phone should be centered on the wireless charging icon if an icon is present. The further the current must travel, charging effciency is reduced and more energy is lost to heat.
3. Phone should be centered on the tray if an icon is not present. The further the current must travel, charging effciency is reduced and more energy is lost to heat.
4. Make sure there aren't any foreign objects on the charger when charging. This can cause the charger to start stop multiple times if the foreign object detector senses an object.
5. Make sure to disconnect the phone from Apps and WiFi during wireless charging while charging and don't use the phone while wireless charging.

IMPORTANT NOTE

- To avoid any risk of suffocation to children or pets, dispose of all plastic bags immediately.
- To ensure proper performance, occasionally check for loose hardware and tighten as needed.
- If the reclining functions are not working properly, check for loose cable connections before contacting the retailer.