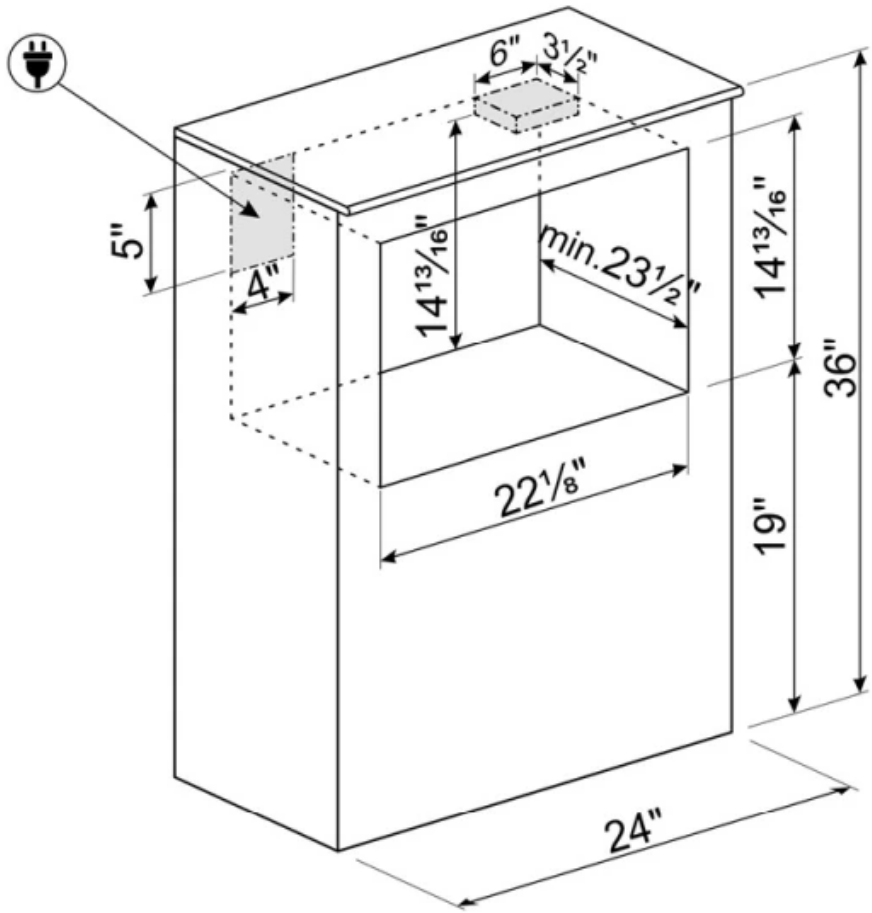
6"
3 1/2"
5"
4"
14 13/16"
min.23 1/2"
14 13/16"
36"
22 1/8"
19"
24"

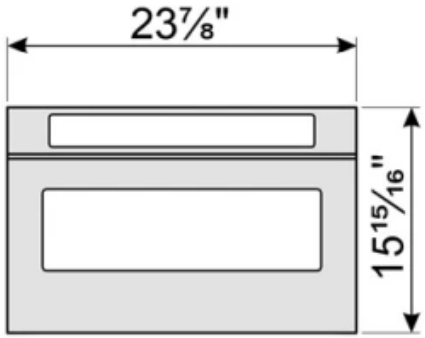
23 7/8"
15 15/16"

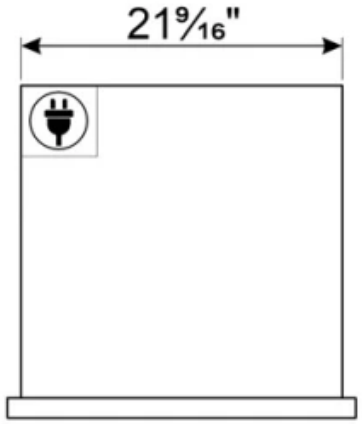
21 9/16"

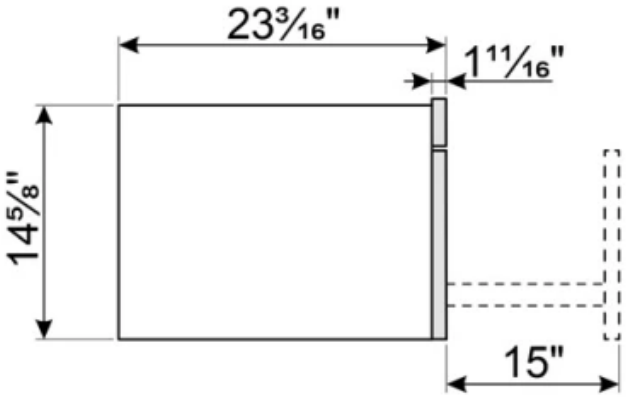
23 3/16"
1 11/16"
14 5/8"
15"