homestyles

5450-01

Personal Storage Unit

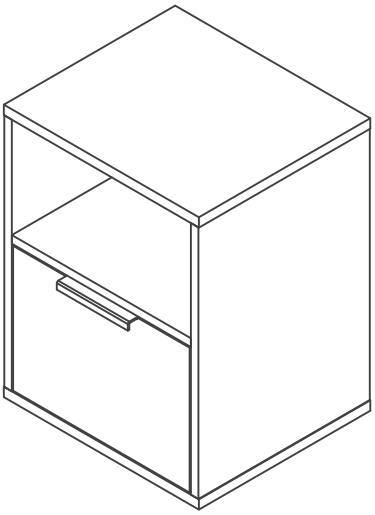

IMPORTANT

Carefully remove all the parts from the carton and place them individually on a soft cloth to prevent scratches or other damage.

Carefully and strictly follow these assembly instructions to ensure a completed product as designed.

Do not use power tools above 8 volts to assemble.

Part List

A.
Top
1 pc.

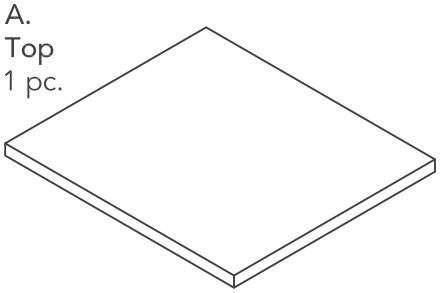

E.
Bottom
1 pc.

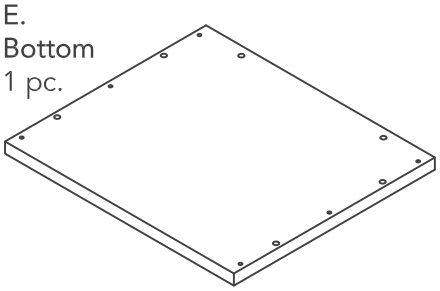

F.
Back Panel
1 pc.

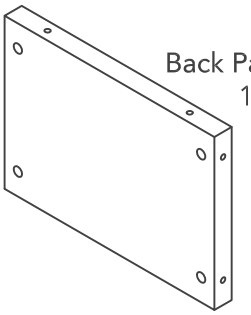

B.
Side Panel
1 pc.

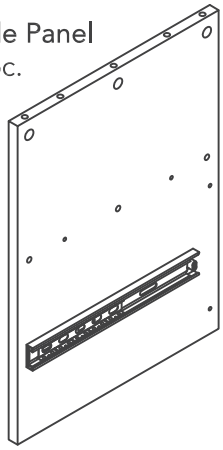

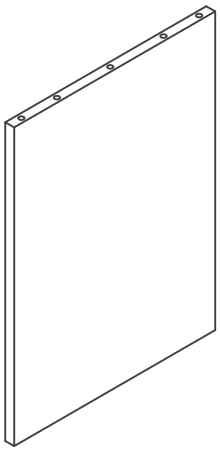

C.
Side Panel
1 pc.

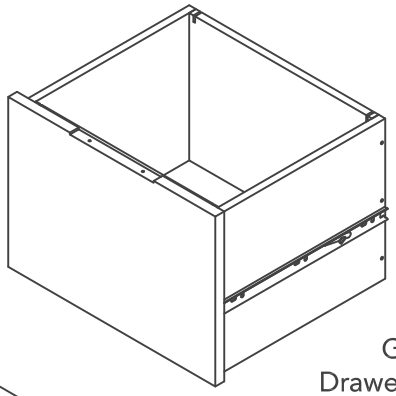

G.
Drawer
1 pc.

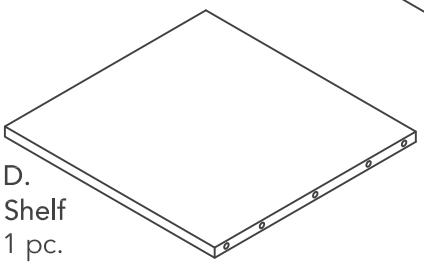

D.
Shelf
1 pc.

Refer to later page(s) of these instructions for drawer assembly.

Hardware List

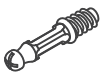

Cam Lock Screw
14 pcs. (+2 extra)

Cam Lock
14 pcs. (+2 extra)

M4x38
1 1/2" Round Head Screw
6 pcs. (+1 extra)

M3x32
1 1/4" Flat Head Screw
12 pcs. (+1 extra)

M3x19
3/4" Flat Head Screw
6 pcs. (+1 extra)

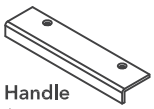

Handle
1 pc.

Dowel
18 pcs. (+1 extra)

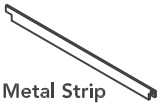

Metal Strip
2 pcs.

Cap
6 pcs. (+1 extra)

Tool(s) required for assembly: Phillips screwdriver, Level.

homestyles Customer Service: www.homestylesfurniture.com, servicedesk@homestylesfurniture.com, 888-680-7460

Assembly Instructions 2/7

IMPORTANT

- Use a soft cloth between these parts and the floor.
- Do not use power tools above 8 volts to assemble.
- Do not tighten all the screws until each part is properly assembled.
- The unit must be level to work properly. Use the included adjustable levelers to level.

STEP 1

Insert Cam Lock Screws into pre-drilled holes in Top (A) and Side Panels (B), (C), then tighten.

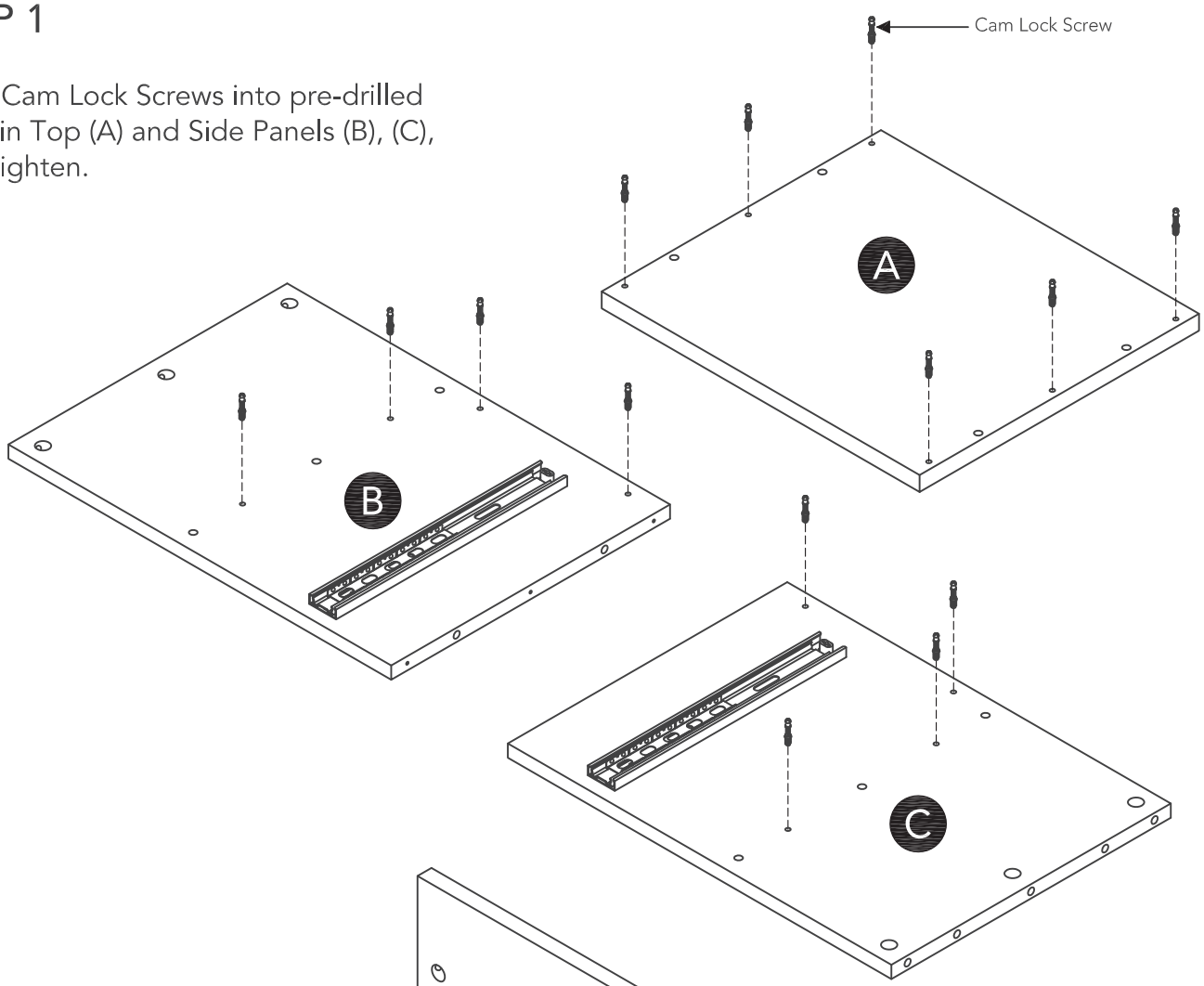

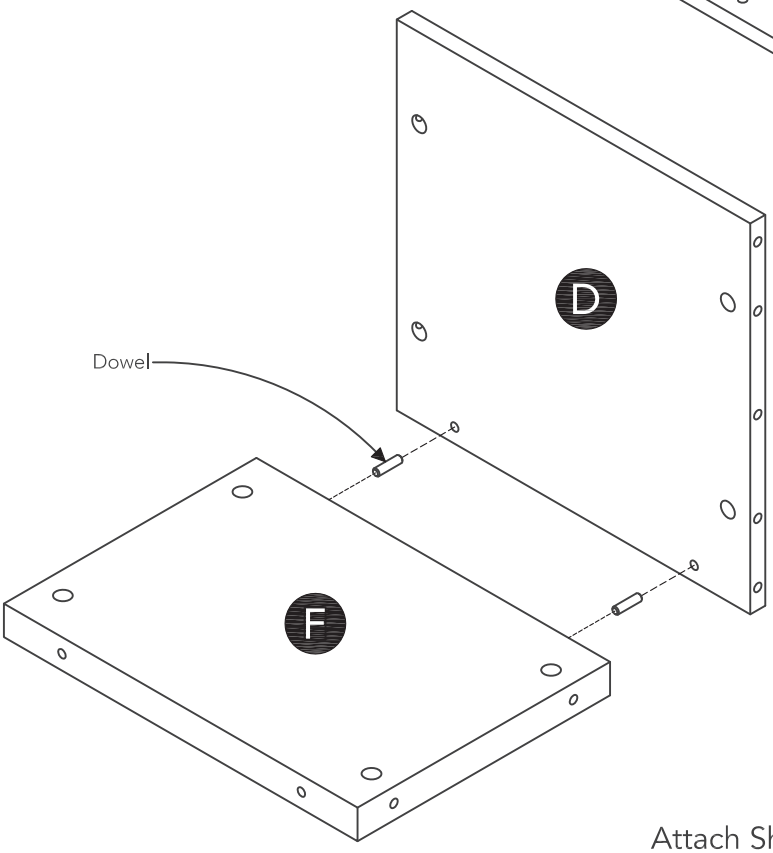

STEP 2

Attach Shelf (D) to Back Panel (F) with Dowels.

STEP 3

Attach Side Panels (B) and (C) to unit with Dowels and Cam Locks. (See Figure 1)

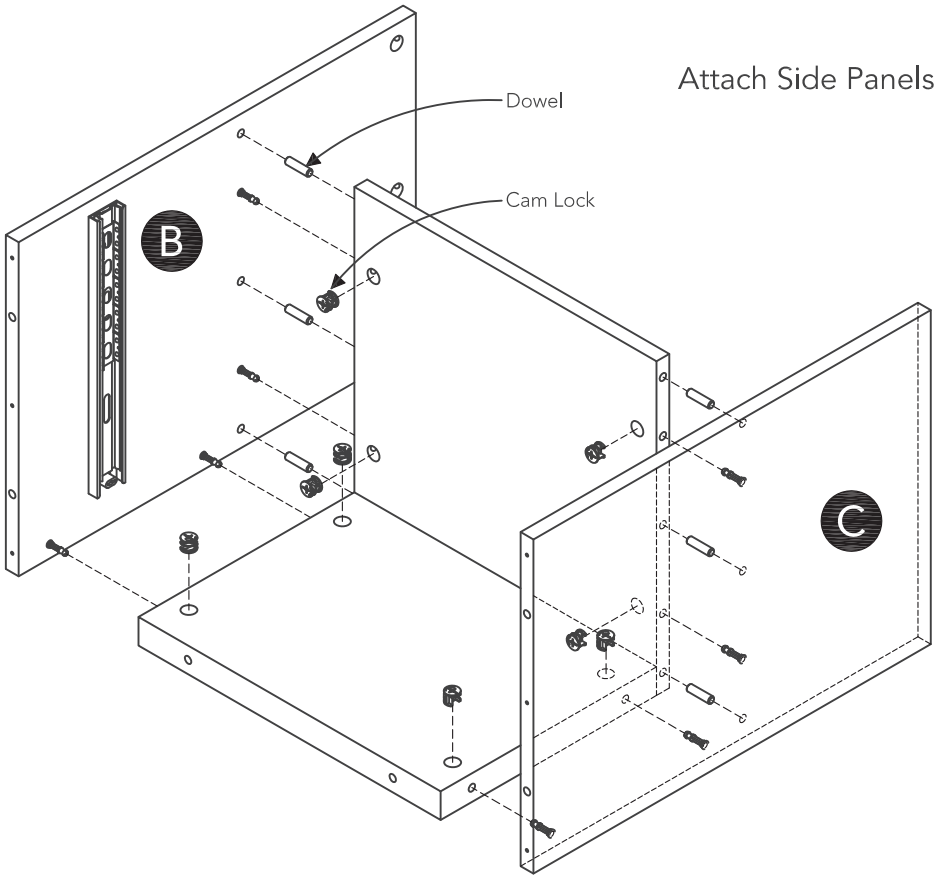

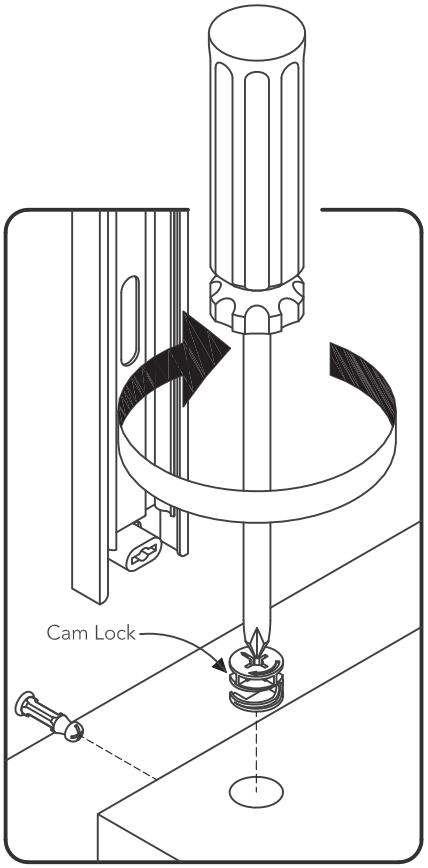

Figure 1

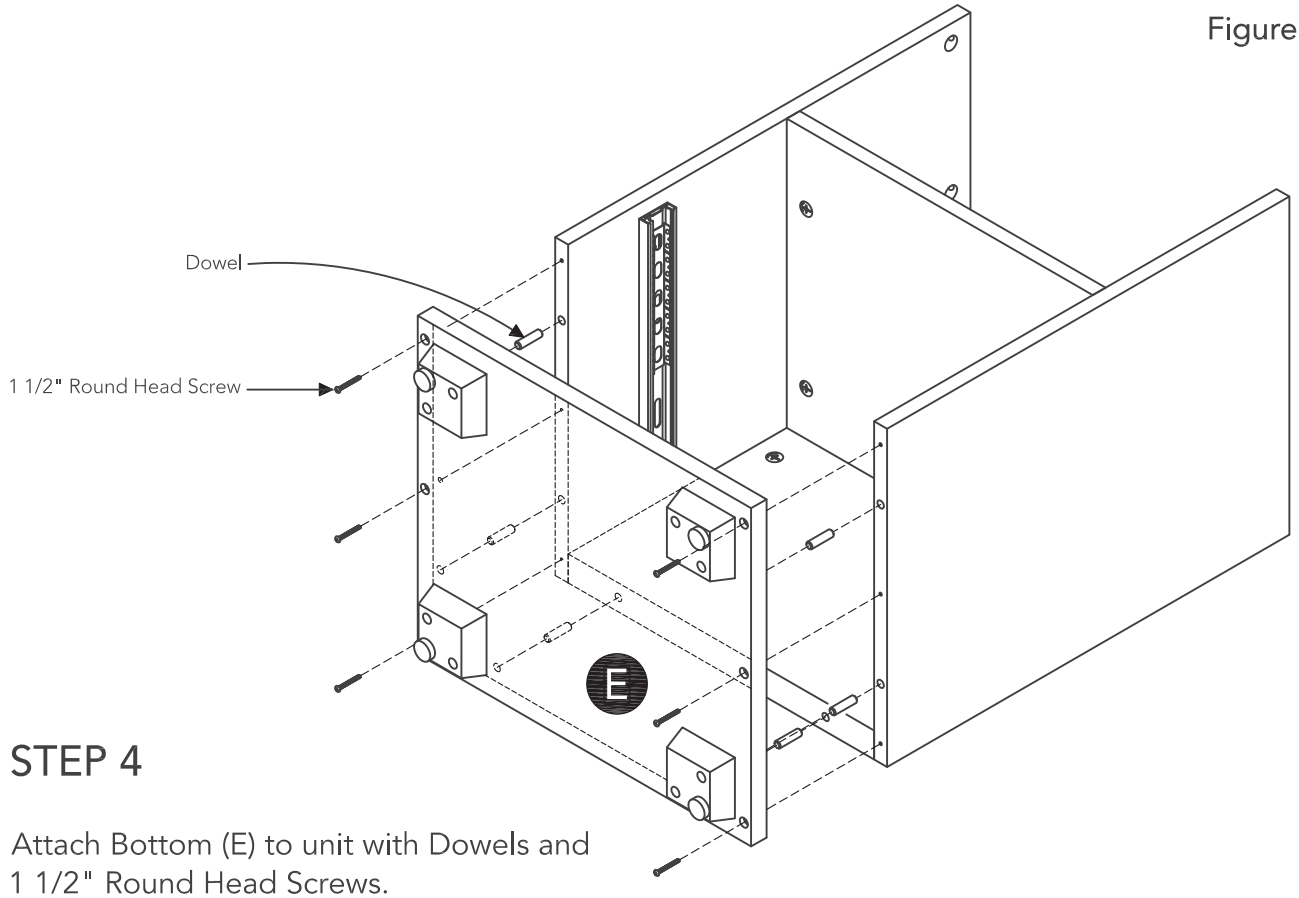

STEP 4

Attach Bottom (E) to unit with Dowels and 1 1/2" Round Head Screws.

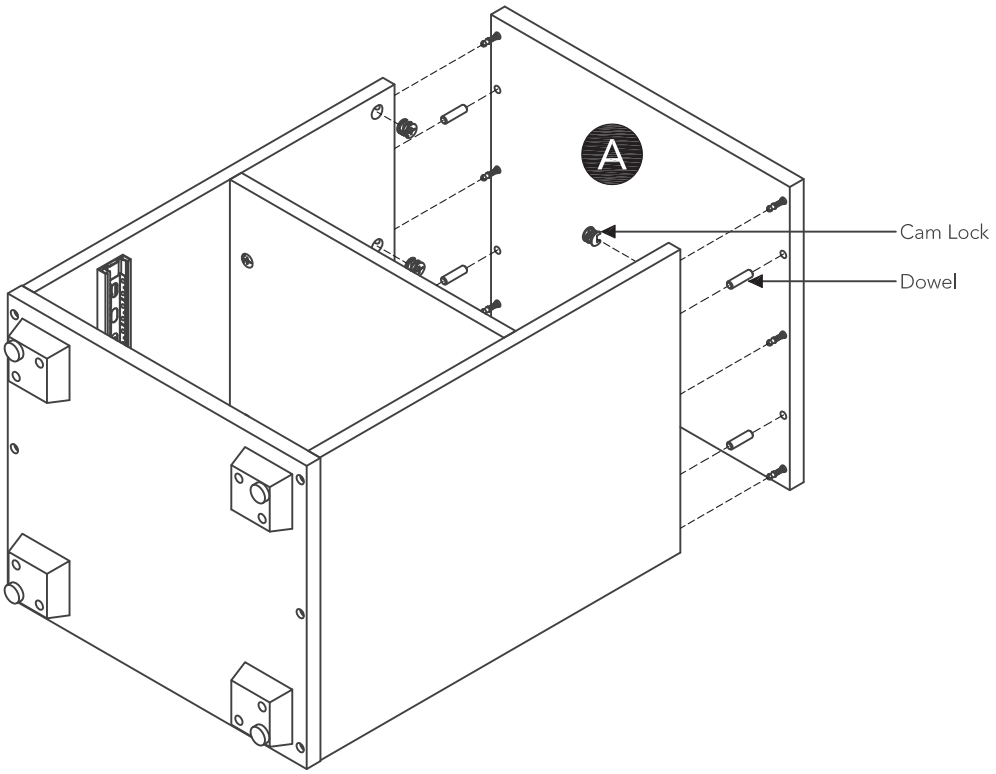

STEP 5

Attach Top (A) to unit with Dowels and Cam Locks.

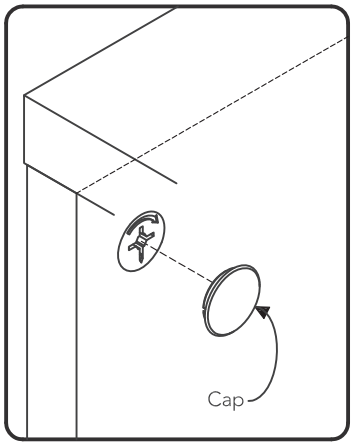

Figure 2

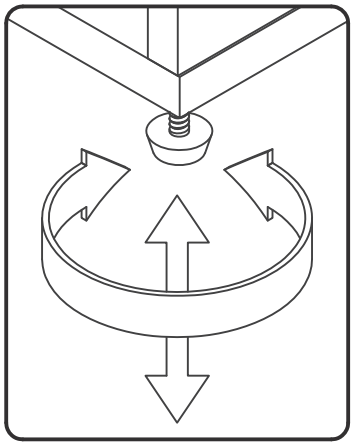

Figure 3

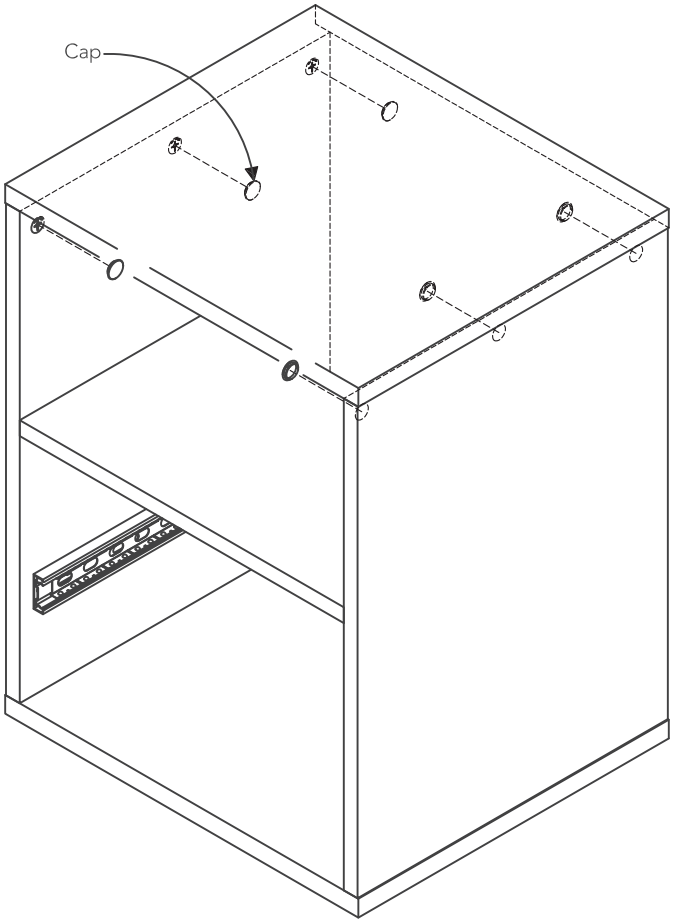

STEP 6

Turn unit to its upright position.

Cover Cam Lock with Caps. (See Figure 2)

Level unit by adjusting the adjustable levelers on bottom of unit.
(See Figure 3)

Note: Unit must be level to proceed.

Drawer (G)

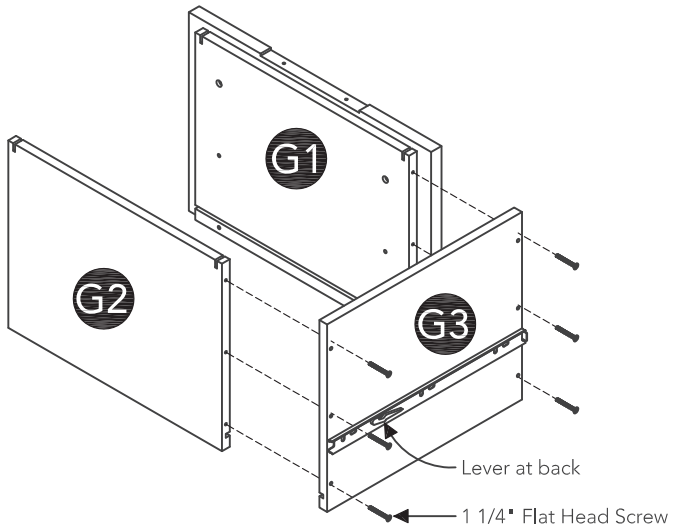

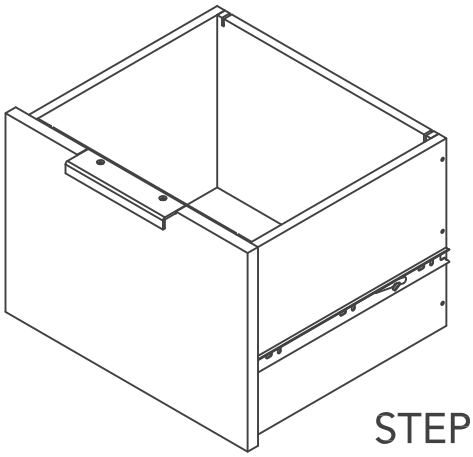

STEP 7

Attach Drawer Front (G1) and Drawer Back (G2) to Drawer Side (G3) with 1 1/4" Flat Head Screws.

STEP 8

Insert Drawer Bottom (G5) into groove.

Attach Drawer Side (G4) to unit with 1 1/4" Flat Head Screws.

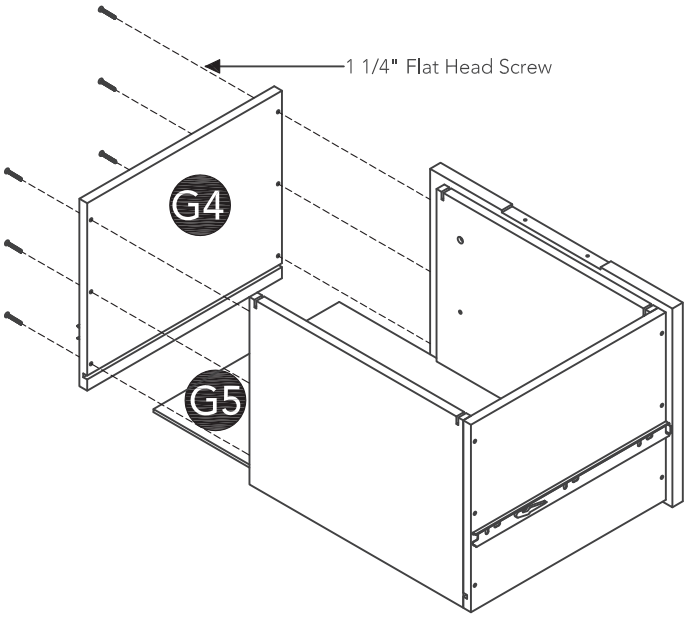

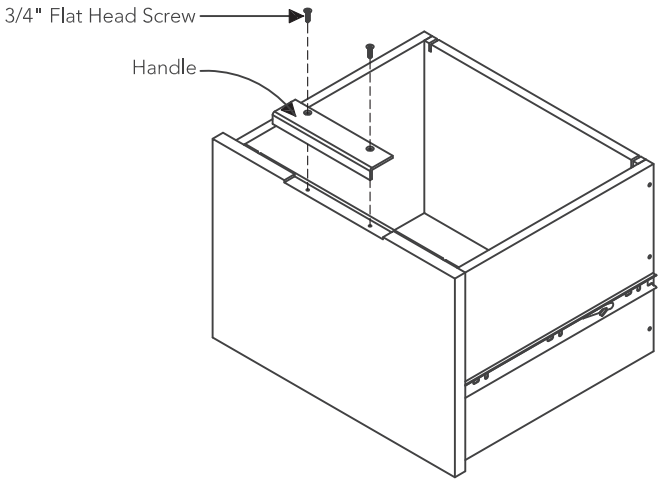

STEP 9

Attach Handle with 3/4" Flat Head Screws.

Note: Drawer assembly is not complete until 3/4" Flat Head Screws are used in a later step.

Part List

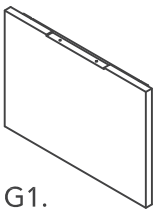

G1.
Drawer Front
1 pc.

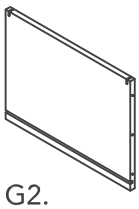

G2.
Drawer Back
1 pc.

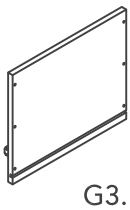

G3.
Drawer Side
1 pc.

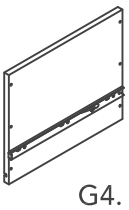

G4.
Drawer Side
1 pc.

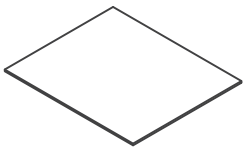

G5.
Drawer Bottom
1 pc.

STEP 10

Loosen slightly screws pre-installed on back of drawer front.

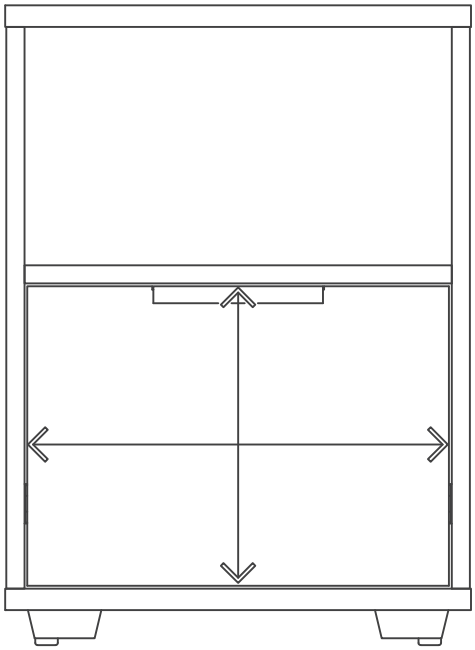

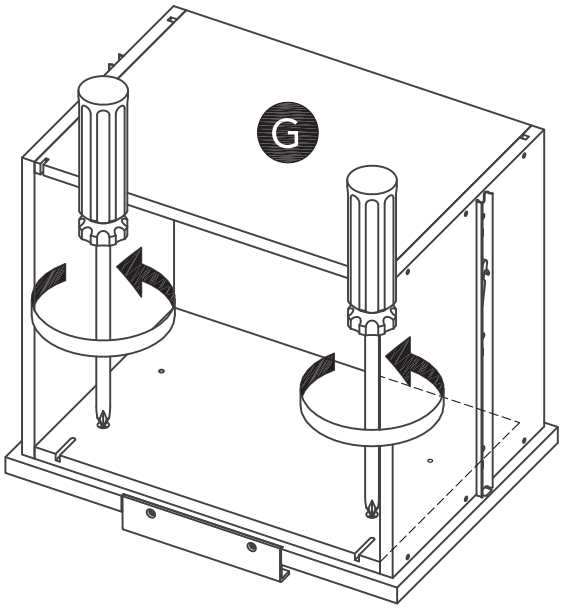

STEP 11

Insert drawer into unit, then adjust drawer front panel left or right and up or down until drawer gaps look proportional.

STEP 12

Pull drawer open slowly, then re-tighten screws from Step 10.

Make sure drawer front panel does not move and lock drawer front panel into position with 3/4" Flat Head Screws.

Note: These 3/4" Flat Head Screws must be installed to complete the drawer assembly.

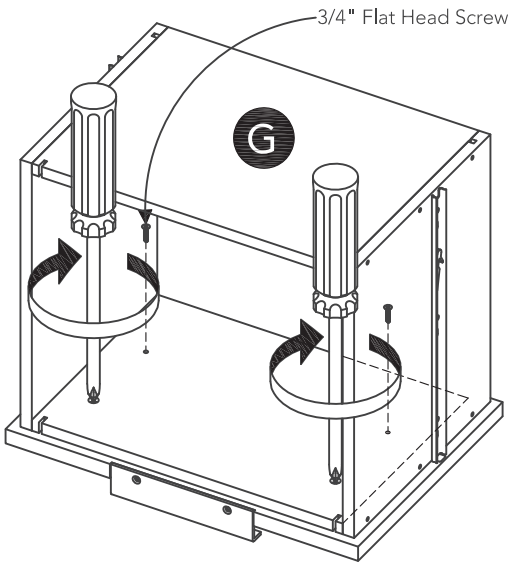

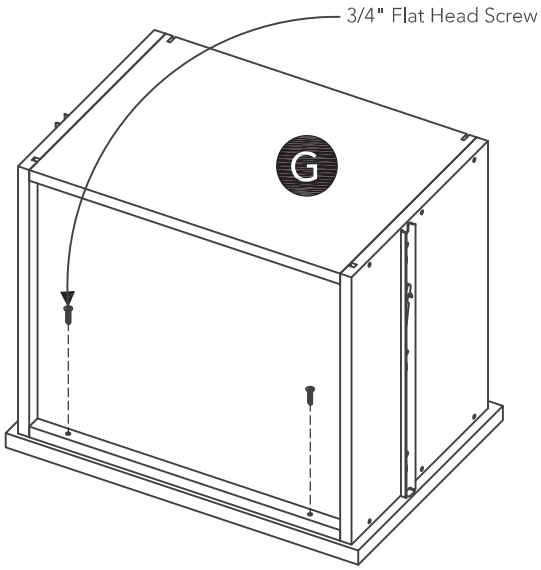

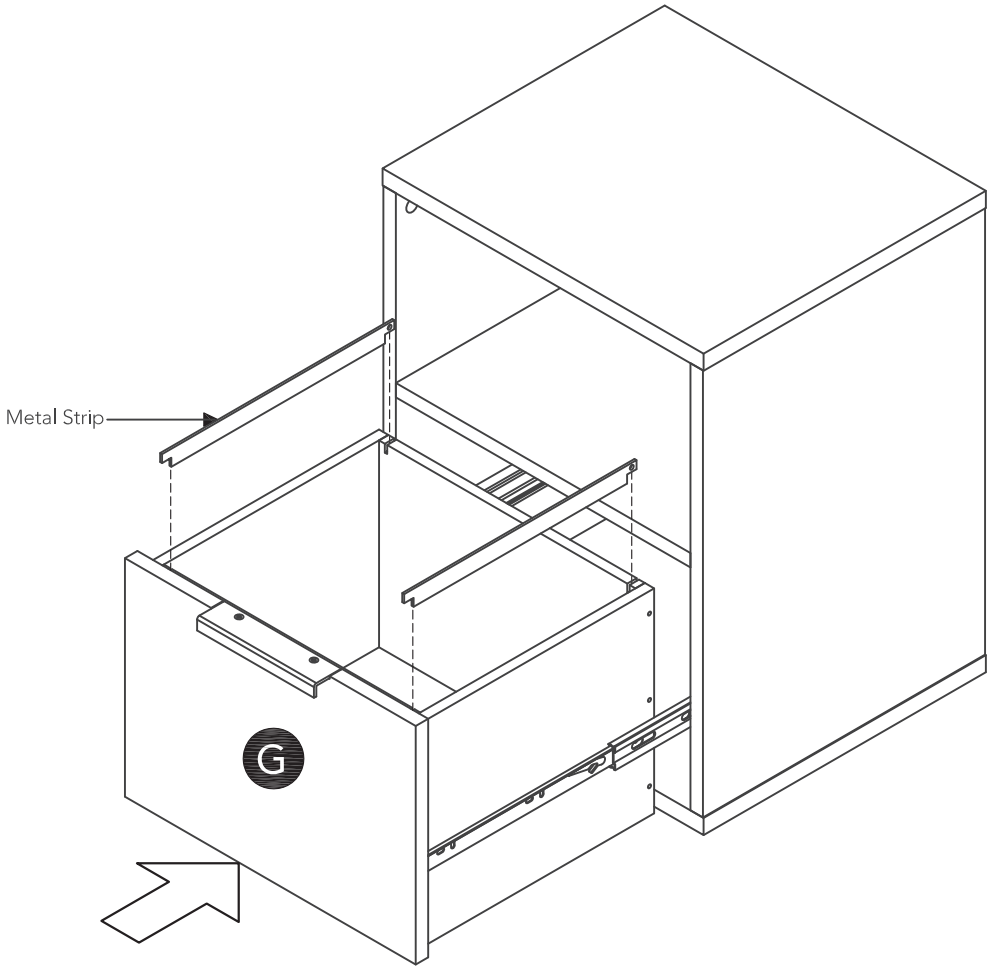

STEP 13

Place Metal Strips into position in Drawer (G).

Slide Drawer (G) into position.

Note: To remove Drawer (G) in future, push plastic lever on left side up, push plastic lever on right side down and pull open. (See Figures 4 and 5)

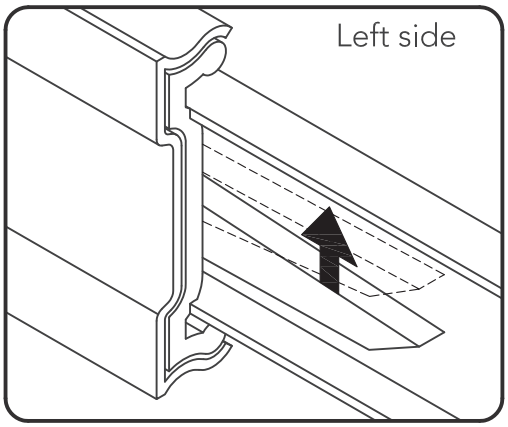

Figure 4

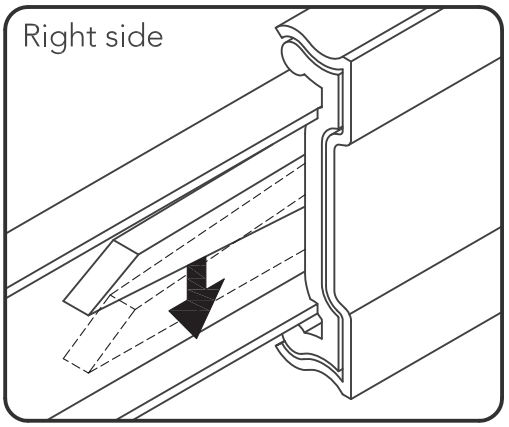

Figure 5

CARE INSTRUCTIONS

NEVER

allow liquids to remain on furniture. Absorption causes parts to warp and split and finishes to delaminate.

NEVER

use glass cleaners on finished furniture. Ammonia chemically attacks the finish.

Do not use power tools above 8 volts to assemble.

PREVENT CRACKING

Do not place in direct sunlight.

PREVENT FADING

Do not write directly on surface.

PREVENT MARKING

Do not place hot objects on surface.

PREVENT FINISH DAMAGE

Do not use rubber based placemats.

PREVENT DISCOLORING

Do not use commercial waxes and polishes.

PREVENT YELLOWING

CLEAN

with a soft cloth moistened in lukewarm soap and water. Buff with a dry clean cloth.

homestyles will provide replacements free of charge for missing or damaged parts within 30 days of purchase. Digital images of the defective parts may be required. If the product was not purchased from an authorized retailer, **home**styles is under no obligation to provide replacement parts. Parts are not available for fully assembled items nor are parts available for sale. Replacements for missing or damaged parts may be requested via contact info below.

homestyles Customer Service: www.homestylesfurniture.com, servicedesk@homestylesfurniture.com, 888-680-7460

homestyles

5450-172
Standing Desk

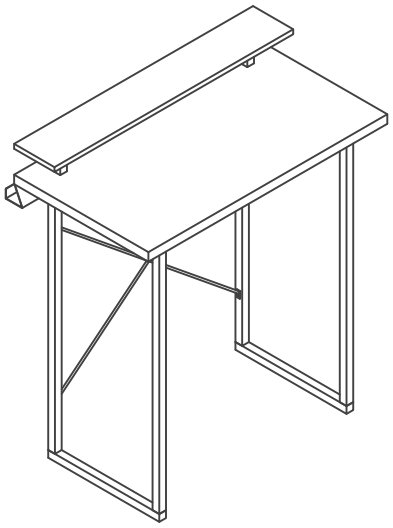

IMPORTANT

Carefully remove all the parts from the carton and place them individually on a soft cloth to prevent scratches or other damage.

Carefully and strictly follow these assembly instructions to ensure a completed product as designed.

Do not use power tools above 8 volts to assemble.

Part List

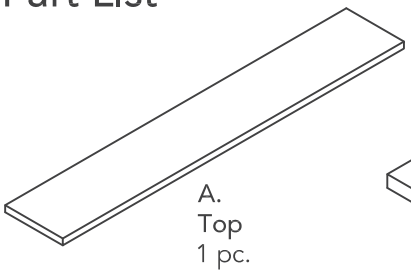

A.
Top
1 pc.

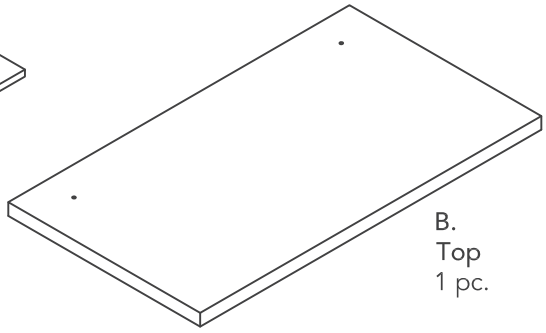

B.
Top
1 pc.

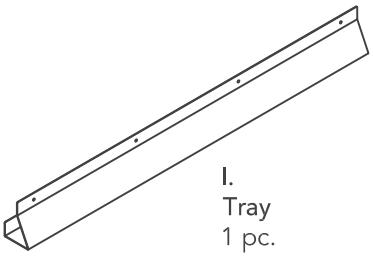

I.
Tray
1 pc.

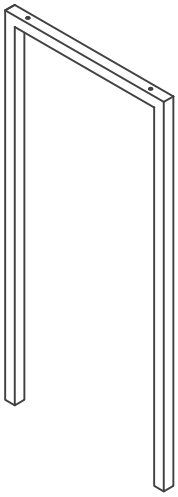

C.
Side Frame
1 pc.

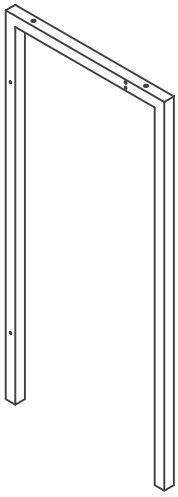

D.
Side Frame
1 pc.

E.
Upright
2 pcs.

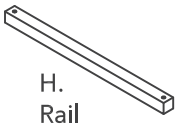

H.
Rail
2 pcs.

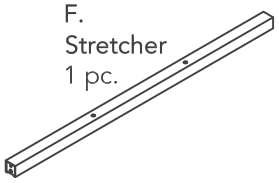

F.
Stretcher
1 pc.

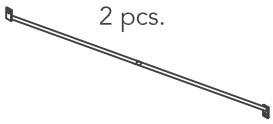

G.
Stretcher
2 pcs.

Hardware List

M6x45
Head Cap Bolt (long)
10 pcs. (+1 extra)

M6x30
Head Cap Bolt (medium)
2 pcs. (+1 extra)

M6x15
Head Cap Bolt (short)
10 pcs. (+1 extra)

M3x19
3/4" Flat Head Screw
4 pcs. (+1 extra)

Pin
2 pcs. (+1 extra)

Flat Washer
2 pcs. (+1 extra)

Spring Washer
2 pcs. (+1 extra)

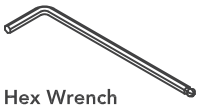

Hex Wrench
1 pc.

Small Hex Wrench
1 pc.

Tool(s) required for assembly: Phillips screwdriver, Level

homestyles Customer Service: www.homestylesfurniture.com, servicedesk@homestylesfurniture.com, 888-680-7460

Assembly Instructions 2/5

IMPORTANT

- Use a soft cloth between these parts and the floor.
- Do not use power tools above 8 volts to assemble.
- Do not tighten all the screws until each part is properly assembled.
- The unit must be level to work properly. Use the included adjustable levelers to level.
- Keep Hex Wrench as the bolts may need to be tightened in the future.

STEP 1

Attach Uprights (E) to Top (A) with Head Cap Bolts (short).

Tighten Head Cap Bolts with Hex Wrench. (See Figure 1)

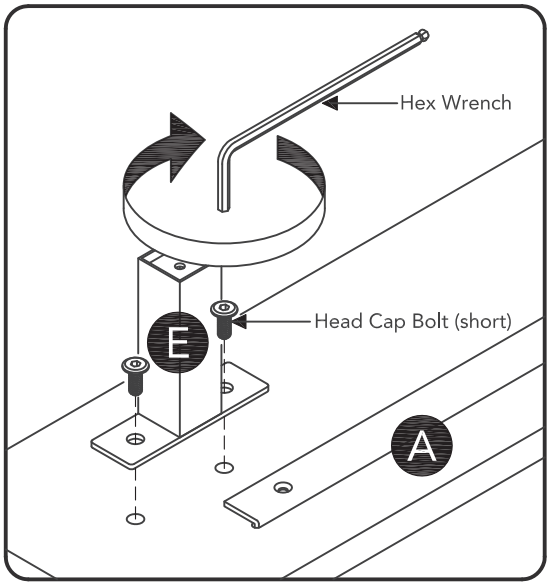

Figure 1

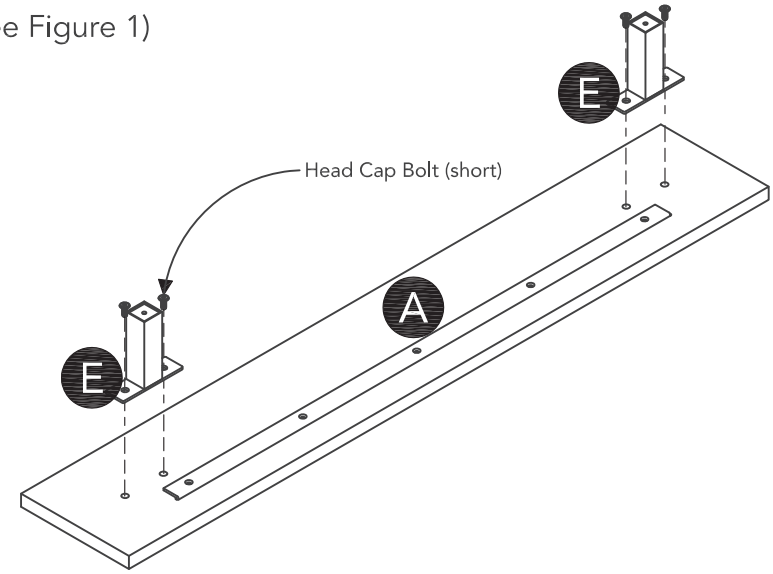

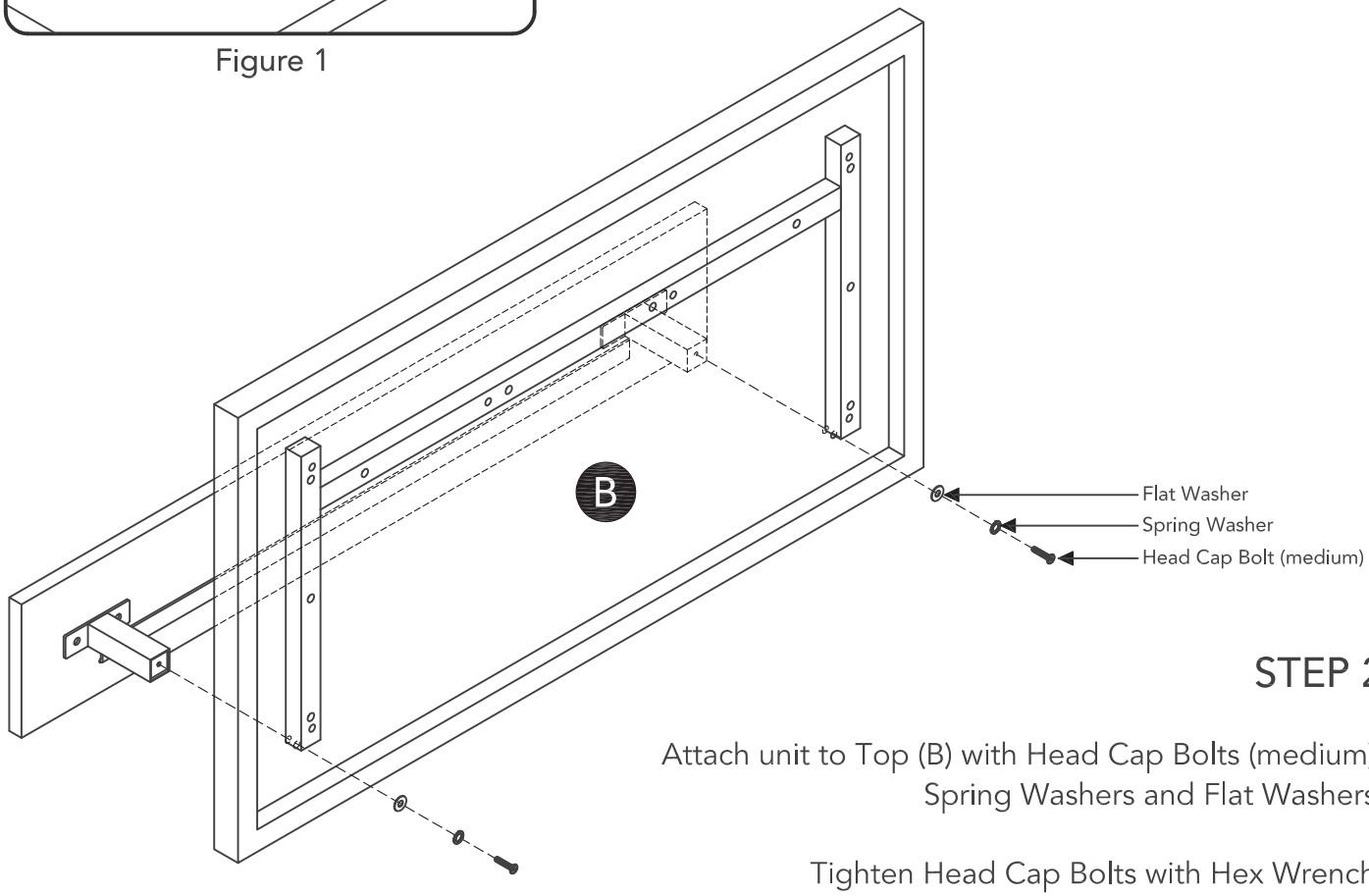

STEP 2

Attach unit to Top (B) with Head Cap Bolts (medium), Spring Washers and Flat Washers.

Tighten Head Cap Bolts with Hex Wrench.

STEP 3

Attach Rails (H) to Side Frames (C) and (D) with Head Cap Bolts (long).

Tighten Head Cap Bolts with Hex Wrench.

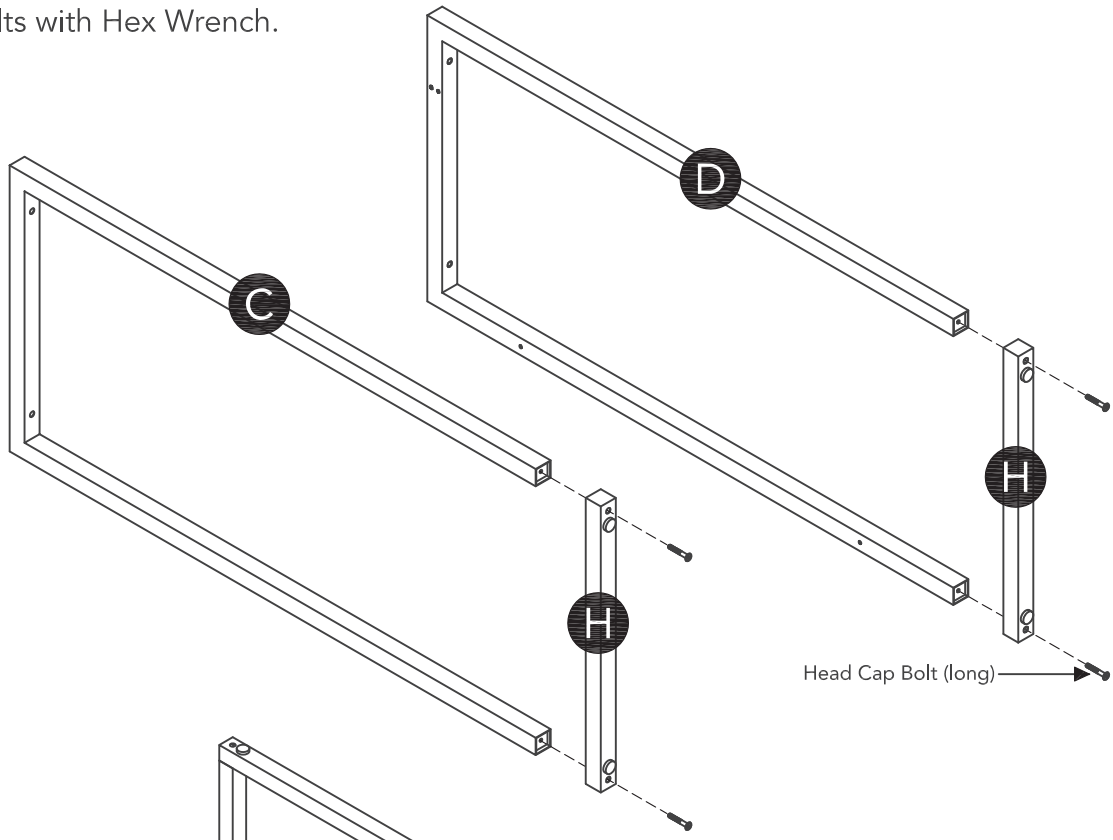

STEP 4

Attach Stretcher (F) to
Side Frames (C) and (D) with Pins and
Head Cap Bolts (short).

Tighten Head Cap Bolts with Hex Wrench.
(See Figure 2)

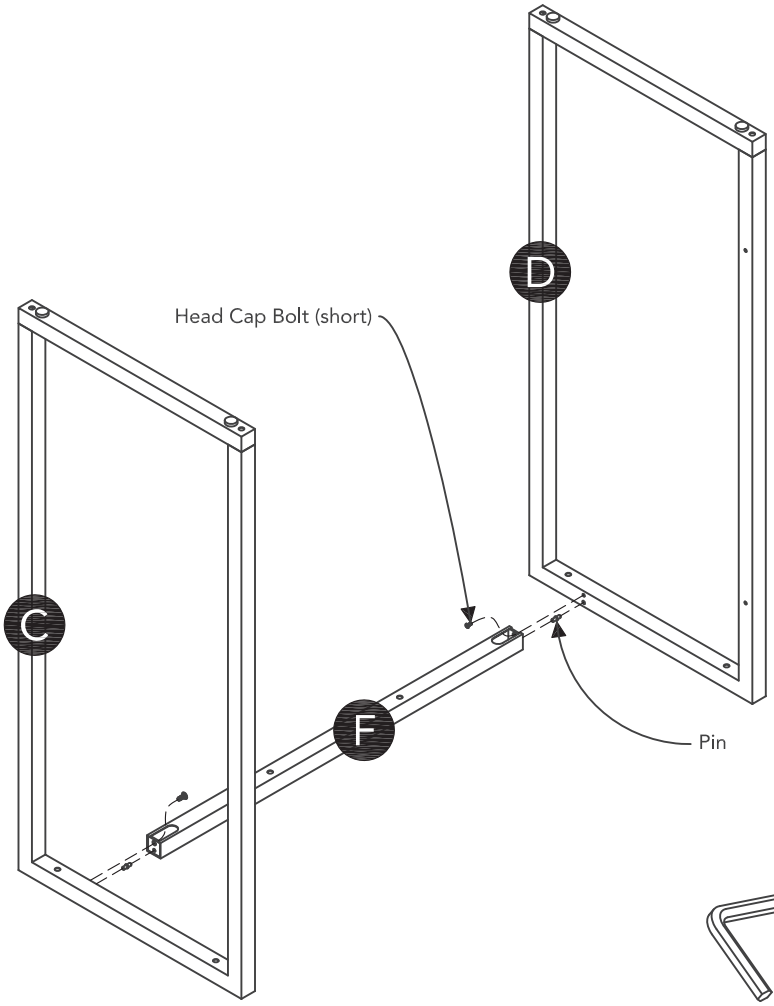

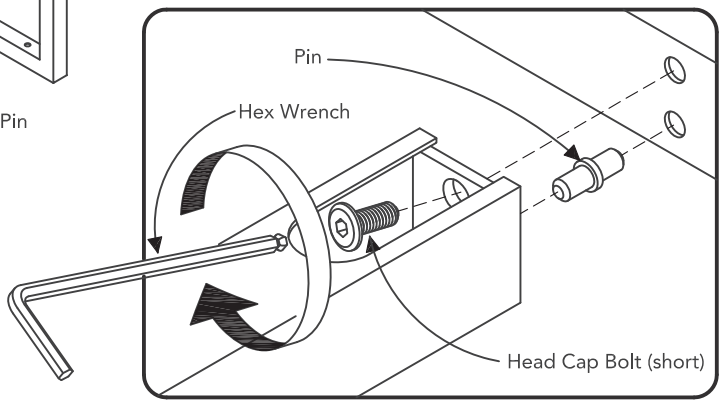

Figure 2

STEP 5

Attach Stretchers (G) to unit with Head Cap Bolts (short).

Tighten Head Cap Bolts with Hex Wrench.
(See Figure 3)

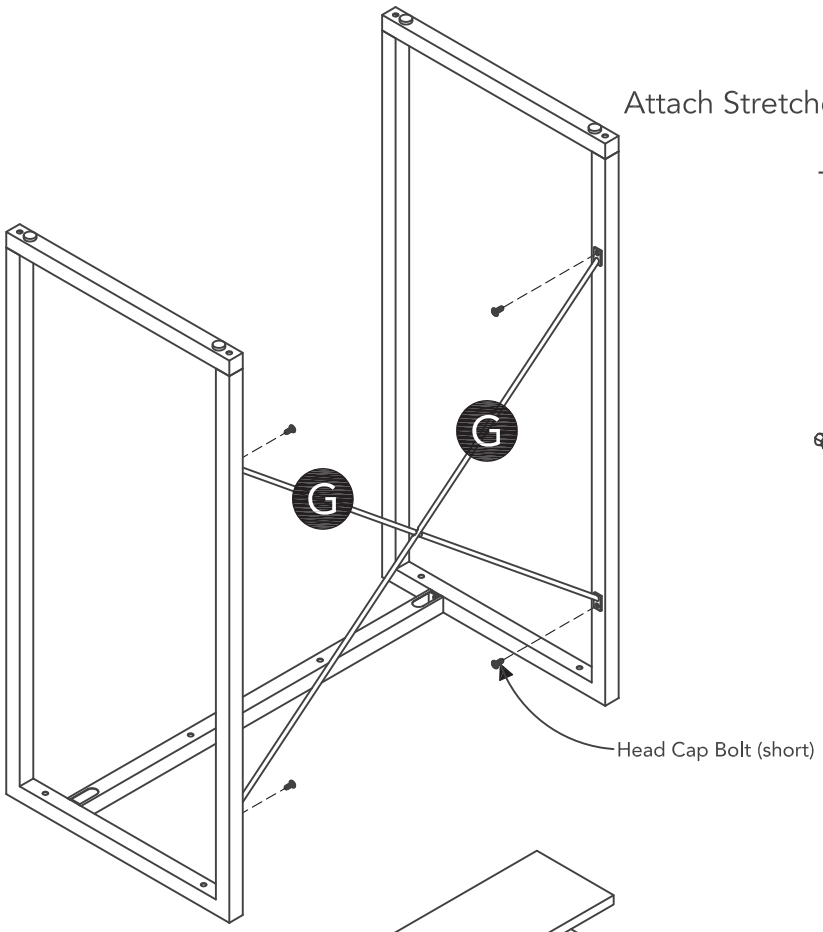

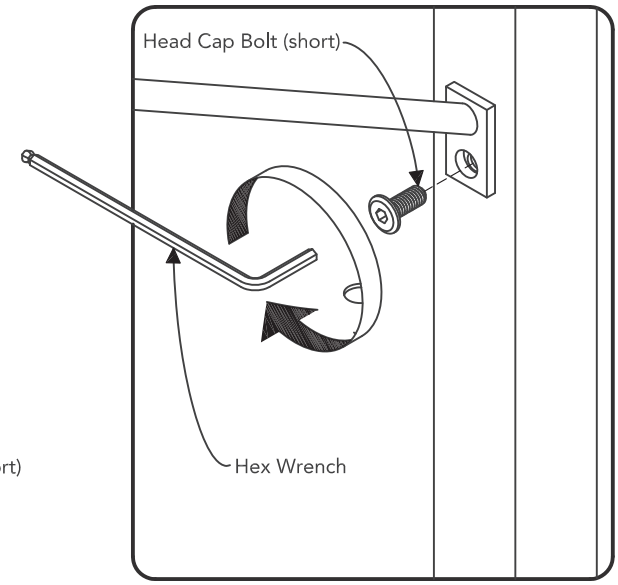

Figure 3

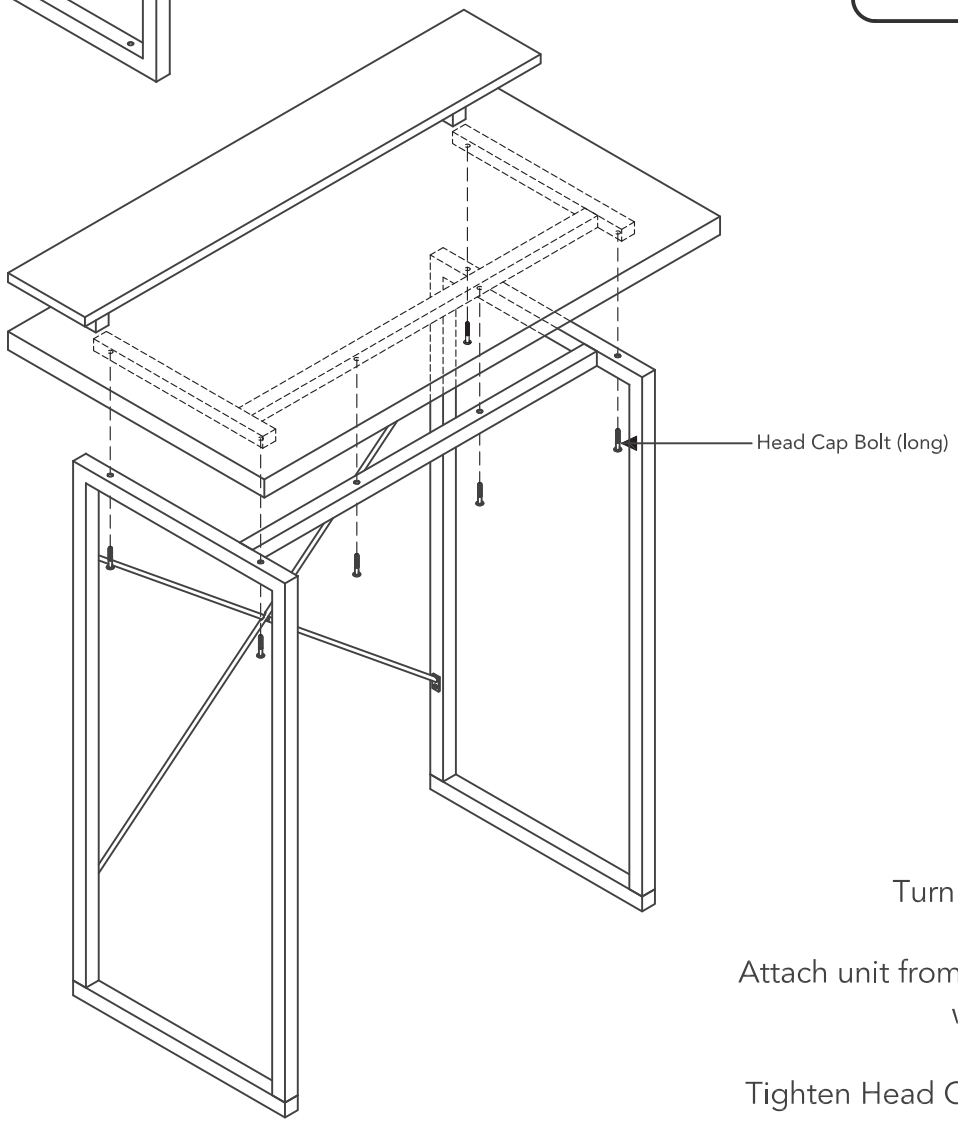

STEP 6

Turn unit to its upright position.

Attach unit from Step 2 to unit from Step 5
with Head Cap Bolts (long).

Tighten Head Cap Bolts with Hex Wrench.

STEP 7

Attach Tray (I) to unit with 3/4" Flat Head Screws.

Level unit by adjusting the adjustable levelers on bottom of unit. (See Figure 4)

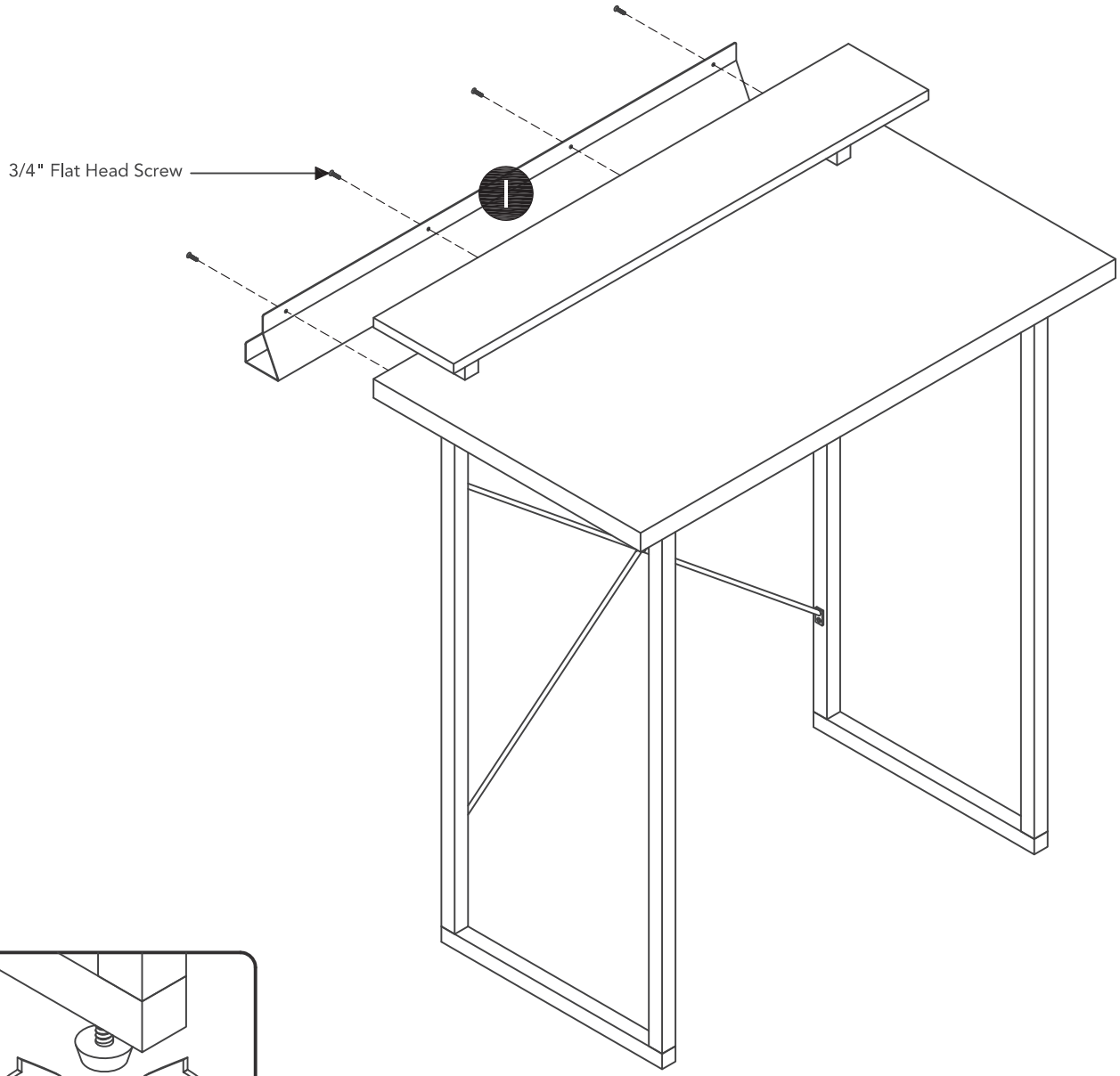

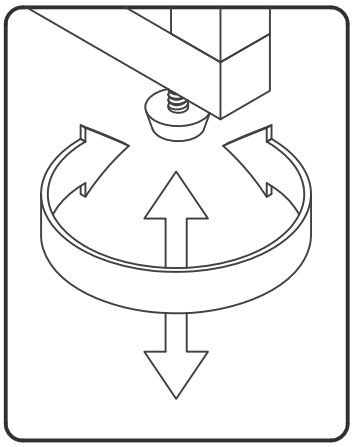

Figure 4

CARE INSTRUCTIONS

NEVER

allow liquids to remain on furniture. Absorption causes parts to warp and split and finishes to delaminate.

NEVER

use glass cleaners on finished furniture. Ammonia chemically attacks the finish.

Do not use power tools above 8 volts to assemble.

PREVENT CRACKING

Do not place in direct sunlight.

PREVENT FADING

Do not write directly on surface.

PREVENT MARKING

Do not place hot objects on surface.

PREVENT FINISH DAMAGE

Do not use rubber based placemats.

PREVENT DISCOLORING

Do not use commercial waxes and polishes.

PREVENT YELLOWING

CLEAN

with a soft cloth moistened in lukewarm soap and water. Buff with a dry clean cloth.

homestyles will provide replacements free of charge for missing or damaged parts within 30 days of purchase. Digital images of the defective parts may be required. If the product was not purchased from an authorized retailer, **home**styles is under no obligation to provide replacement parts. Parts are not available for fully assembled items nor are parts available for sale. Replacements for missing or damaged parts may be requested via contact info below.

homestyles Customer Service: www.homestylesfurniture.com, servicedesk@homestylesfurniture.com, 888-680-7460