ENGLISH

FORNO È
Alta Qualita

Refrigerator

USER MANUAL

MODEL NUMBER SERIES

FFFFD1766-24LS
FFFFD1766-24WHT-LS
FFFFD1766-24BLK-LS

Intertek
3084455

CONFORMS TO UL STD.
60335-1&60335-2-24
CERTIFIED TO CSA STD.C22.2
NO.60335-1&60335-2-24

Read these instructions carefully before using your appliance, and keep it carefully.
If you follow the instructions, your appliance will provide you with many years of good service.

SUMMARY

Customer Care.....4
SAFETY INFORMATION.....5
Disposal of Old Appliance.....9
Energy Saving.....10
Before first use.....10
Fridge use.....11
Freezer use.....11
Storage.....12
Control panel.....13
Ice Maker & Water connection.....15
LED light replacement instructions.....16
Care and Cleaning.....17
Defrosting.....17
Troubleshooting.....18
Installation preparation.....19
Door handle installation.....20
Ventilation.....21
Circuit Diagram.....22
Warranty.....23

Customer Care

Thank you for purchasing a Forno product. Please read the entire instruction manual before operating your new appliance for the first time. Whether you are an occasional user or an expert, it will be beneficial to familiarize yourself with the safety practices, features, operation and care recommendations of your appliance.

Both the model and serial number are listed inside the product. For warranty purposes, you will also need the date of purchase .

Record this information below for future reference.

Product Information

Model Number : _____

Serial Number :

Date of Purchase :_____

Purchase Address And Phone : _____

_____

_____

Service Information

Use these numbers in any correspondence or services calls concerning your product.

If you received a damaged product, immediately contact Forno.

To save time and money, before you call for serviced, check the troubleshooting guide. It listed the causes of minor operation problems that you can correct yourself.

"Need some quick help? Simply scan the qr code and get access to our fast support form. We're always here to assist you with any questions or concerns you may have. So, don't hesitate to reach out!"

Services in Canada and Untied States

Keep the instruction manual handy to answer your questions. If you don't understand something or need more assistance, please visit our website for fast support. Please provide us your name, number, address,serial number of the product that troubleshooting, proof of purchase, and a short description of the issue. A customer service representative will contact you as soon as possible. All warranty work needs to be authorized by FORNO customer service. All our authorized service

providers are carefully selected and rigorously trained by us.

Thank you for purchasing this product.
Before using your refrigerator, please carefully read this instruction manual in order to maximize its performance. Store all documentation for subsequent use or for other owners. This product is intended solely for household use or similar applications such as:
The kitchen area for personnel in shops, offices and other working environments On farms, by clients of hotels, motels and other environments of a residential type At bed and breakfasts(B&B)
For catering services and similar applications not for retail sale.
This appliance must be used only for purposes of storage of food, any other use is considered dangerous and the manufacturer will not be responsible for any omissions. Also, it is recommended that you take note of the warranty conditions.

SAFETY INFORMATION

This is the Safety Alert Symbol. This symbol alerts you to potential hazards that can kill or injure you and others. All safety messages will follow the Safety Alert Symbol and either the words" DANGER", "WARNING" or "CAUTION".

DANGER

Danger means that failure to heed this safety statement may result in severe personal injury or death.

WARNING

Warning means that failure to heed this safety statement may result in extensive product damage, serious personal injury, or death.

CAUTION

Caution means that failure to heed this safety statement may result in minor or moderate personal injury, or property or equipment damage.

All safety messages will alert you to what the potential hazard is, tell you how to reduce the chance of injury, and let you know what can happen if the instructions are not followed.

If the supply cord is damaged, it must be replaced by the manufacturer, its service agent or similarly qualified persons in order to avoid a hazard.

This appliance is not intended for use by persons (including children) with reduced physical, sensory or mental capabilities, or lack of experience and knowledge, unless they have been given supervision or instruction concerning use of the appliance by a person responsible for their safety.

Children should be supervised to ensure that they do not play with the appliance.

This appliance can be used by children aged from 8 years and above and persons with reduced physical sensory or mental capabilities or lack of experience and knowledge if they have been given supervision or instruction concerning use of the appliance in a safe way and understand the hazards involved. Children shall not play with the appliance. Cleaning and user maintenance shall not be made by children without supervision.(EU)

Keep the appliance and its cord out of reach of children less than 8 years.(EU).

Do not store explosive substances such as aerosol cans with a flammable propellant in this appliance.

The max. loading of shelve is 22 lbs(10kg).

The appliance shall be used at an ambient temperature listed according to it's climate class:
89 °F（32℃）± 35 °F（2℃） on appliances of climatic class 0,1,2,3,4,6 or 8;
109 °F （43°C）± 35 °F（2℃）Con appliances of climatic class 5 or 7.

The appliance use flammable insulation blowing gas C5H10, disposal of the appliance shall in accordance with the regulations of local authorities.

The appliance provided with double-capped fluorescent lamps, the lamp has to be replaced by identical lamps only.

The key for appliance electric box should be safe kept by qualified persons in order to avoid a hazard

Based on business order(s) to EU market, give true EU authorized representative information on the label with full business name and full EU address in the marking plate.

If the appliance use flammable refrigerant, such as R600a, R290:

Warning; Risk of fire / flammable materials

WARNING: Keep ventilation openings, in the appliance enclosure or in the built-in structure, clear of obstruction.

WARNING: Do not use mechanical devices or other means to accelerate the defrosting process, other than those recommended by the manufacturer.

WARNING: Do not damage the refrigerant circuit.

WARNING: Do not use electrical appliances inside the food storage compartments of the appliance, unless they are of the type recommended by the manufacturer.

WARNING: When positioning the appliance, ensure the supply cord is not trapped or damaged.

WARNING: Do not locate multiple portable socket-outlets or portable power supplies at the rear of the appliance.

WARNING:Do not store explosive substances such as aerosol cans with a flammable propellant in this appliance.

WARNING:To avoid a hazard due to instability of the appliance, it must be fixed in accordance with the instructions

Handling, moving, and use of the refrigerator or freezer to avoid either damaging the refrigerant tubing, or increasing the risk of a leak

Caution – Risk of Fire or Explosion due to Flammable Refrigerant Used. Follow Handling Instructions Carefully in Compliance with U.S. Government Regulations.

Component parts shall be replaced with like components and that servicing shall be done by factory authorized service personnel, so as to minimize the risk of possible ignition due to incorrect parts or improper service.

CAUTION – Risk Of Fire Or Explosion Due To Puncture Of Refrigerant Tubing; Follow Handling Instructions Carefully. Flammable Refrigerant Used

DANGER: Risk of child entrapment. Before you throw away your old refrigerator or freezer:Take off the doors Leave the shelves in place so that children may not easily climb inside.

DANGER:If the LED lamp is damaged, it must be replaced by the manufacturer, its service agent or similarly qualified persons in order to avoid a hazard.

DANGER-Risk Of Fire or Explosion.Flammable Refrigerant Used. Do Not Use Mechanical Devices To Defrost Refrigerator.Do Not Puncture Refrigerant Tubing.

DANGER-Risk Of Fire Or Explosion.Flammable Refrigerant Used. To Be Repaired Only By Trained Service Personnel.Do Not Puncture Refrigerant Tubing.

CAUTION-Risk Of Fire Or Explosion.Flammable Refrigerant Used. Consult Repair Manual/Owner's Guide Before Attempting To Service This Product. All Safety Precautions Must be Followed.

CAUTION-Risk Of Fire Or Explosion.Dispose Of Property In Accordance With Federal Or Local Regulations. Flammable Refrigerant Used

CAUTION-Risk Of Fire Or Explosion DueTo Puncture Of Refrigerant Tubing;Follow Handling Instructions Carefully.Flammable Refrigerant Used

This appliance is intended to be used in household and similar applications such as
– staff kitchen areas in shops, offices and other working environments;
– farm houses and by clients in hotels, motels and other residential type environments;
– bed and breakfast type environments;
– catering and similar non-retail applications.

Disposal of Old Appliance

Dispose of your appliance packaging properly. Refrigeration equipment must be properlydisposed of in a way which protects the environment. This applies to your old appliance and to your newunit once it has reached the end of its service life.
Please according to local regulations regarding disposal of the appliance for its flammable refrigerant and blowing gas.
WARNING: Please ensure that old, worn appliances are rendered unusable before disposal by removing the plug, cutting the power cable, and removing or destroying any snap fastenings or bolts. You will thus prevent children from locking themselves in the appliance during play (risk of suffocation) or endangering their lives in any other way.
The appliance must not be disposed with normal household waste collection.
The coolant circuit, particularly the heat exchange at the back/bottom of the unit, must not be damaged.
The symbol on the product or its packaging indicates that this product is not to be handled as normal household waste but is to be taken to a recycling collection point for electrical and electronic goods. By correctly disposing of this product you are contributing to the protection of the environment. Improper disposal endangers health and the environment. Further information about the recycling of the product may be obtained from your town hall or local waste collection department.

Energy Saving

For better energy saving we suggest :

Installing the appliance away from heat sources and not exposed to direct sunlight and in a well ventilated room.

Avoid putting hot food into the refrigerator to avoid increasing the internal temperature and therefore causing continuos functionaliting of the compressor.

Do not excessively stuff foods so as to ensure proper air circulation.

Defrost the appliance in case there is ice to facilitate the transfer of cold.

In case of absence of electrical energy, it is advisable to keep the refrigerator doorclosed.

Open or keep the doors of the appliance open as little as possible

Avoid adjusting the setting to temperatures too cold.

Remove dust present on the rear of the appliance

Before first use

You must allow the fridge to settle for at least four hours prior to switching the power on.

It is recommended that you clean the interior of the appliance prior to first use, using a solution of bicarbonate of soda and warm water and then thoroughly drying the interior. The fridge may have an odor to it at first use. This will disappear as the appliance cools.

Please note:

The appliance will start 41 °F (5°C) for fridge and -0.5 °F(-18℃) for freezer and work continuously until it comes down to the correct temperature. If the appliance is switched off, you should allow five minutes before switching it on again to prevent unnecessary damage to the compressor. Never store in flammable or explosive items and strong corrosive acids or alkalis in the appliance. This fridge cools your food by making the inside back of the cavity cold. It is normal for frost to build up on this surface; it then dissipates and drains through a small drain at the bottom, where it evaporates harmlessly. The presence of frosting at the back is not a malfunction of the fridge.

Fridge use

Never put liquids in the refrigerator uncovered.

Never put hot foods in the refrigerator. Warm food should be allowed to cool to room temperature before being put into the refrigerator.

Nothing should rest against the rear wall of the refrigerator, as this will cause frost and possible condensation problems which will be difficult to remove.

Make sure food is clean and any extra water is wiped away before putting into the fridge.

Wrap or cover food before putting into the fridge. This will help prevent the loss of moisture, keep food fresh and avoid unpleasant odors.

Sort foods prior to storing. Any foods to be used soon should be stored at the front of the shelf to prevent deterioration caused by the door being open for prolonged periods.

Do not overfill the fridge. There should be sufficient space between the foods to allow the cool air to circulate.

Thawing frozen foods in the fridge compartment will help to keep the temperature low and save energy.

Never store raw meats on shelves above cooked meats or other produce. This will help to prevent juices from raw meat contaminating otherfoodstuffs.

Freezer use

The freezer compartments are designed to store only frozen food.

Never put hot or warm foods in the freezer, allow them to cool fully before putting them into the freezer.

Follow the instructions on the food packaging for storage of frozen food. If no information is provided, foods should not be stored for more than three months after the purchase date.

Store food in small packages (ideally less than 2.2 lbs (1kg)).This reduces the freezing time and improves the quality of the food after thawing.

Wrap food before putting into the freezer. To stop the wrapping sticking together, ensure it is dry.

Label the food before freezing with information including type of food and dates of storage and expiry.

Once food is thawed, it must not be refrozen. Only defrost as much food as is required to prevent wastage.

Bottled or canned drinks should not be stored in the freezer compartments as they could explode.

The maximum amount of fresh food that can be frozen within a 24 hour period is 5.8 lbs (2.6kg).

Do not attempt to freeze more than the maximum amount.

Storage

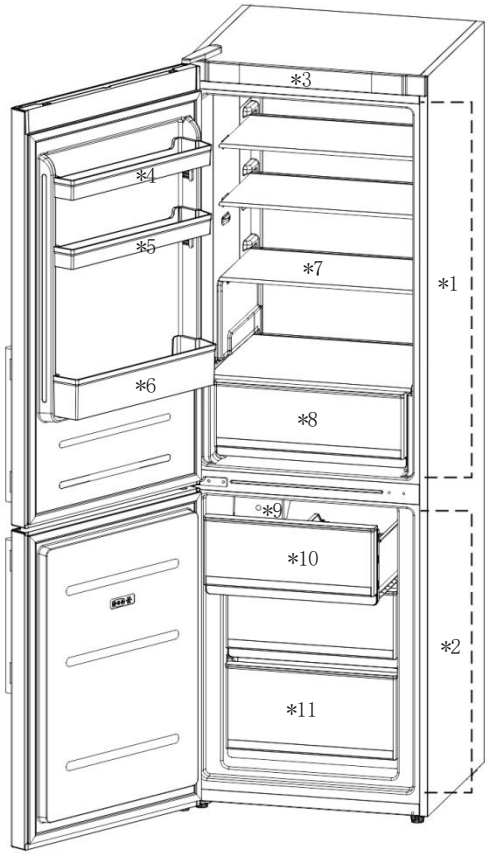

1- Fridge compartment
2- Freezer compartment
3- Display/indicator panel
4- Butter & cheese section
5- FlexiLift Door Shelves
6- Bottle shelf
7-Adjustable glass shelf
8-Crisper
9-Ice Maker
10- Upper Freezer Drawer
11- Lower Freezer Drawer

Figures in this user manual are schematic and may not match the product exactly. If the subject partsare not included in the product you have purchased, then those parts are only valid for other models

Control panel

1. First time of switching on the appliance, this appliance always works at settings: 41 °F (5°C) for fridge, 0°F（-18℃） for freezer. If you want to adjust the temperature or functions manually, pres and -s the button to conduct the operations.

2. Fridge temperature adjustment –press button on left part of control panel to achieve different temperatures from 34°F (1℃) to 43°F (6℃).

3. Freezer temperature adjustment –press button on right part of control panel to achieve different temperatures from 5°F(-15)℃ to-9°F(-23℃).

4. Sabbath Mode-Press and hold buttons and simultaneously for 5 seconds to enter Sabbath mode, turning off all lights. After the screen turns off, touch any button to display “SABB” for 1 second before returning to normal display. Press and hold buttons and simultaneously for 5 seconds again to exit Sabbath mode, restoring all lights to normal display.

5. Fast cooling function –Press button , light of button illumines and fast cooling function is turned on, fridge starts to work automatically at temperature setting 36°F(2℃) and quits after 24 hours, light of symbol eliminates.

6. Holiday function–Press button , light of button illumines, holiday function is turned on and whole appliance starts to work automatically at settings: fridge at 63°F(17℃) and freezer at -0°F(-18℃).

7. Eco function – Press button on control panel, eco function is turned on and button illuminates, fridge compartment works at setting 41°F (5°C) and freezer compartment works at setting of-0°F(-18℃).

8. Fast freezing function – Press button , light of button illumines and freezer start to work at fast freezing function, temperature setting -13°F(-25℃). After 24 hours, fast freezing function quits automatically.

9.Press button for 3 seconds to switch off your appliance and the button illumines, power is cut off. Internal lamps eliminate, compressor stops working. Press the button for 3

seconds to switch on your appliance, the symbol illumined and power is connected again.

10. On the no frost models, there is a function: compulsive defrosting. Press the buttons + for 5 seconds to switch on the compulsive defrosting function to clean the freezer evaporator and digitals of freezer temperature shine. Press the button + 3 seconds to switch off the compulsive defrosting function , and the digitals of freezer temperature eliminate.

10 Fault display

This appliance has 'fault display & alarm' function. Once the sensors got fault, there are alarms displayed on the temperature displaying, the appliance still cools but professional service engineer should be called and check the appliance.

F3 – Sensor of fridge apartment

F4 – Sensor of freezer compartment

F5 – Sensor of defrosting

2E – Fault of fan/motor in freezer

CE– Communication fault between main panel and display panel.

The above Errors only show on display, no voice

Over temperature alarm in freezer: after freezer temperature arrives at the set temperature, after that, if the temperature rises to ＞77°F (-1 ° C), the alarm will start, accompany with flash of freezer temperature digit. Press any button to cancel the voice alarm. The flash will remain until the temperature is ＜77°F (-1 ° C).

PS: Main board locates in compressor compartment

POSITION	CONDITIONS
41 °F (5°C) - -0.5 °F(-18℃)	Summer or ambient temperature between 77°F(25°C) - 95°F (35 °C)
41 °F (5°C) - -0.5 °F(-18℃)	Spring or ambient temperature between 59°F(15°C) - 77°F (25 °C)
41 °F (5°C) - -0.5 °F(-18℃)	Winter or ambient temperature between 41°F(5°C) - 59°F (15 °C)

Instructions for Ice Maker

Key operation instructions.

1. Short press the button, the ice maker status for switching on or off
2. In the power on state, long press the button for 10 seconds, for manual de-icing

Lamp status description:

1. Switch on state: the light will fade on and then fade off-------->Breathing state
2. Switch off state: the light is not on.
3. Ice full state: always on
4. Drawer removal: slow flash 0.5 seconds flash once (1HZ)

Fault status.

1. Ice jam.Fast flash 1 time 200ms

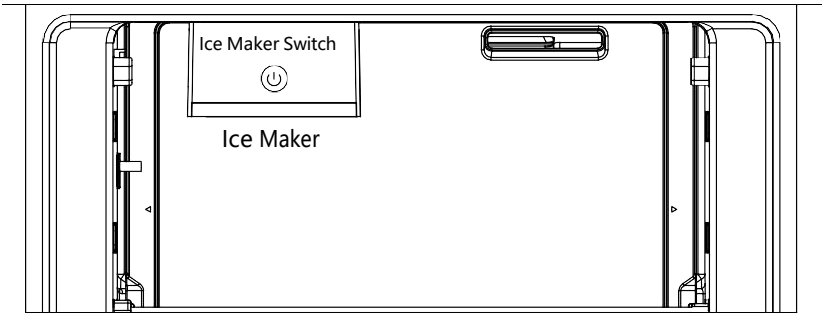

Water connection

Before installing the refrigerator, connect the water pipe in the rear cabin to the water pipe in your home, the cabin is equipped with M11 size connecting water pipe as shown below.

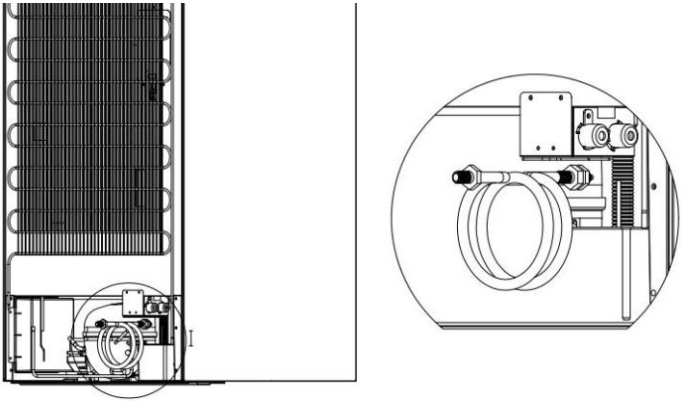

LED light replacement instructions

Note: the LED light is set to be non replaceable by the user and needs to be replaced by professionals.
Lighting parameters: 12V / 2W
1. Unplug the power plug.
2. Remove the screws securing the top light cover. Steps ① and ② are shown below
3. Replace the spare LED light board.

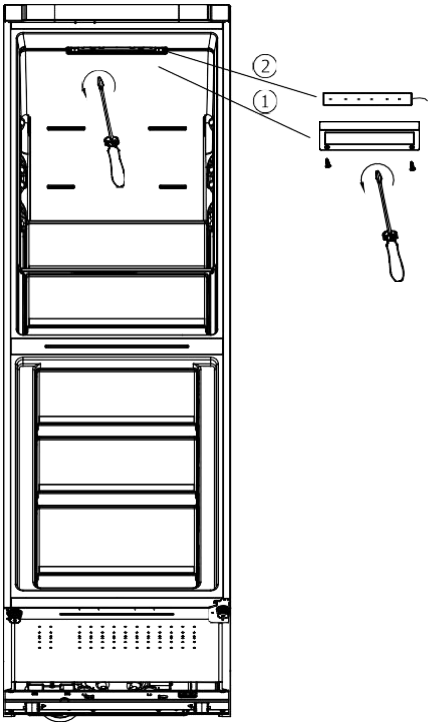

Care and Cleaning

Always disconnect the appliance from the power supply before any cleaning or maintenance.
The fridge and freezer sections should be cleaned using a solution of bicarbonate of soda and lukewarm water. Do not use abrasive products or detergents. After washing, rinse and dry thoroughly.

Clean the shelves and balconies separately by hand with a mild solution of washing up liquid and water. Do not put them in the dishwasher.

If the appliance is not to be used for prolonged periods of time, unplug and clean the appliance. The doors should be left slightly ajar to prevent the formation of mildew and unpleasant odors.

Defrosting

The product has a no frost system which is designed to prevent the heavy build up of ice. Under normal use, there should be no need to regularly defrost the freezer system.

Please note: If you are regularly finding a heavy build up of ice, or pools of water, in the freezer section then it is likely that the door is not sealing properly. This could be due to a defective door seal or an incorrectly fitted, or overly heavy, decor door. For more information see the troubleshooting section about ice.

Troubleshooting

If you have any problems with your appliance, you should check the troubleshooting prior to calling Customer Care.

If the appliance is not working, check:

That there is power to the appliance.

The house fuses are intact and the fuse in the plug has not blown.

The fridge has not been turned off.

The plug socket is functioning fine. To check this, plug another electrical appliance in to see if the socket is faulty.

If the appliance is working, but not very well, check:

The appliance is not overloaded.

The thermostat is set to an appropriate temperature.

The doors are closing properly.

The cooling system at the rear of the appliance is clean and free of dust, and not touching the rear wall.

There is enough ventilation at the side and rear walls.

If the appliance is noisy, check:

The appliance is level and stable.

The side and rear walls are clear, and there is nothing resting on the appliance.

Note: The cooling gas in the refrigerator may make a slight bubbling or gurgling noise, even when the compressor is not running.

If the appliance is beeping, check:

That the doors are closed. An alarm will sound after 60 seconds of a door being open.

If ice has formed on the back wall of the fridge:

It is normal for some ice droplets to form on the back wall of the fridge. This does not constitute a fault with the appliance.

Ensure that no items inside the fridge are in contact with the back wall.

Check that there is some resistance when opening the door of the appliance. If it opens at the slightest touch it may mean that the door seal needs to be replaced.

Check the door seal for any kinks, debris or damage. If you notice any, and are unable to resolve the issue yourself, contact Customer Care so that the seal can be replaced.

This can be due to the decor door(s) not being properly fitted. If you are at all unsure, ask your fitter to check the décor doors.

If excessive ice has formed in the freezer:

Check that there is some resistance when opening the door of the appliance. If it opens at the slightest touch it may mean that the door seal needs to be replaced.

Check the door seal for any kinks, debris or damage. If you notice any, and are unable to resolve the issue yourself, contact Customer Care so that the seal can be replaced.

This can be due to the decor door(s) not being properly fitted. If you are at all unsure, ask your fitter to check the decor doors.

If one or more of the LED units within the appliance is not working:

Contact Customer Care to arrange a service visit.

Installation preparation

Important:
Before connecting the refrigerator to a power source, allow it to stand upright and undisturbed for 24 hours.

This appliance must never be installed close to heat sources, e.g. heating elements or cookers, nor in damp places.

Seek the help of another individual, or two, when installing this appliance. This appliance may have sharp edges. Wear adequate PPE for the task and environment.

To ensure the appliance is level, you should use the height adjustable feet at the front of the appliance.

The cooling system at the rear of the appliance must not touch the rear wall. The greater the gap, the better.

The appliance must be installed with adequate ventilation. Ensure that there is clearance above the appliance to allow air to escape and that there is space between the rear of the appliance and the wall.

Door Handle Installation

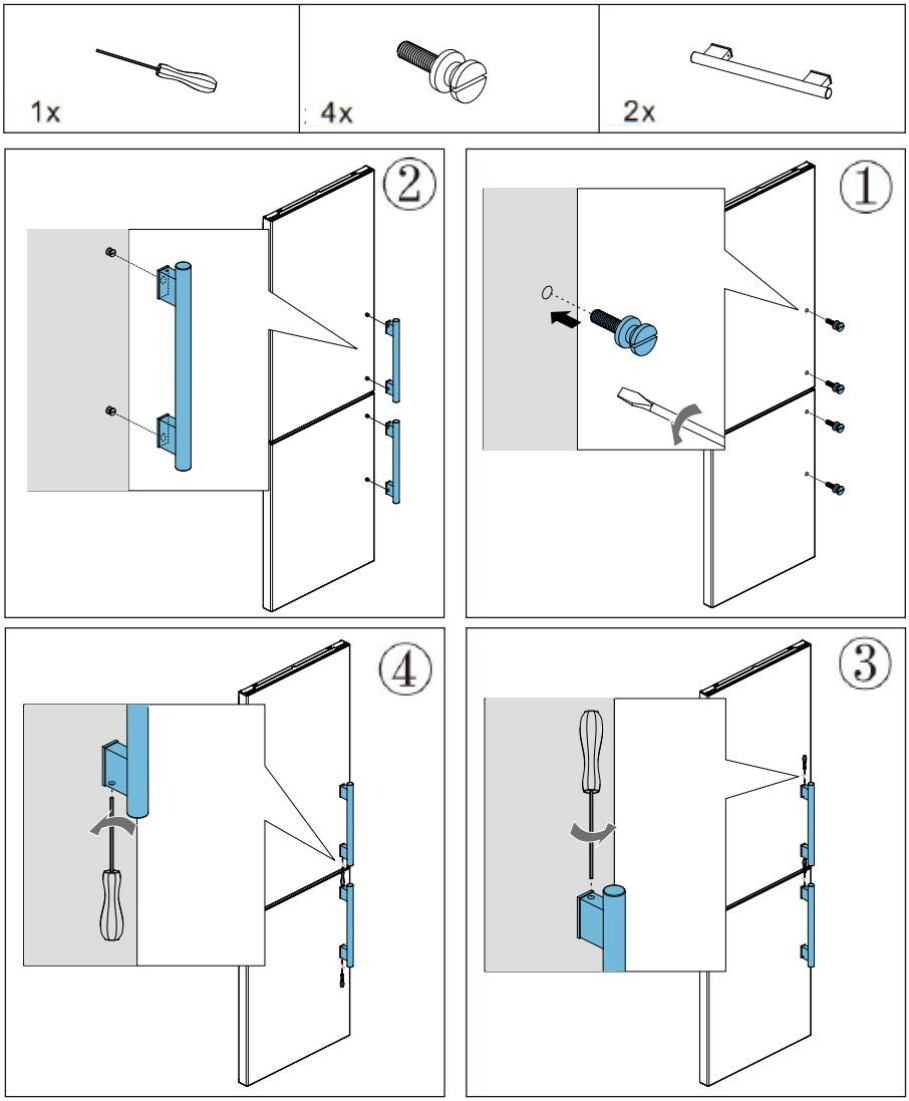

Ensuring the door seals correctly:

It is normal for the seal to be compressed after the door has been reversed. With the door closed, use a hair dryer to expand the seal and fill the gap between the door and the body of the appliance. Take care not to use the hair dryer too close to the appliance, which could damage the seal. A distance of approximately 10cm should be adequate. When completed, allow the seal and door to cool before touching them. Once done, the seal should remain in position.

Ventilation

The main consideration when installing any refrigeration unit into a fitted kitchen is ventilation. The heat removed from the cooling compartment needs to be dissipated into the atmosphere. Incorrect ventilation can lead to premature compressor failure, excessive power consumption, total system failure and may invalidate the warranty provided with the appliance. For products intended to be installed into a tall housing unit, the following requirements need to be met:

Do not tilt beyond 40°

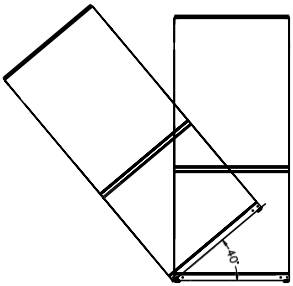

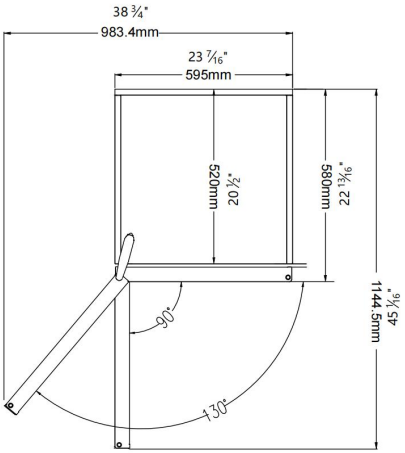

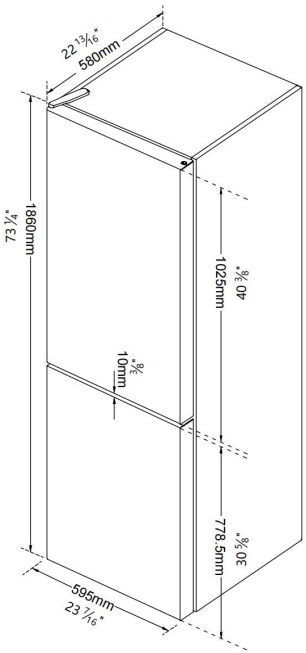

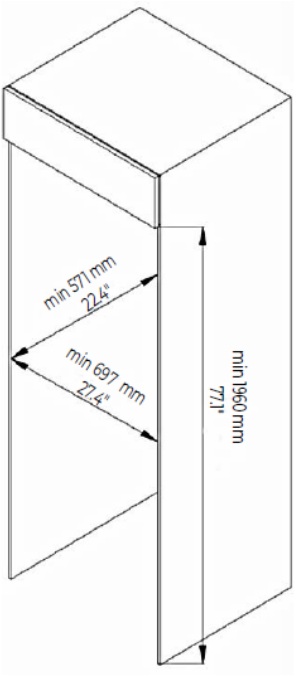

As above the fridge can fit in the cupboard, the top of the cupboard needs to have at least 100mm(3 15/16”) of ventilation clearance from the fridge

Circuit Diagram

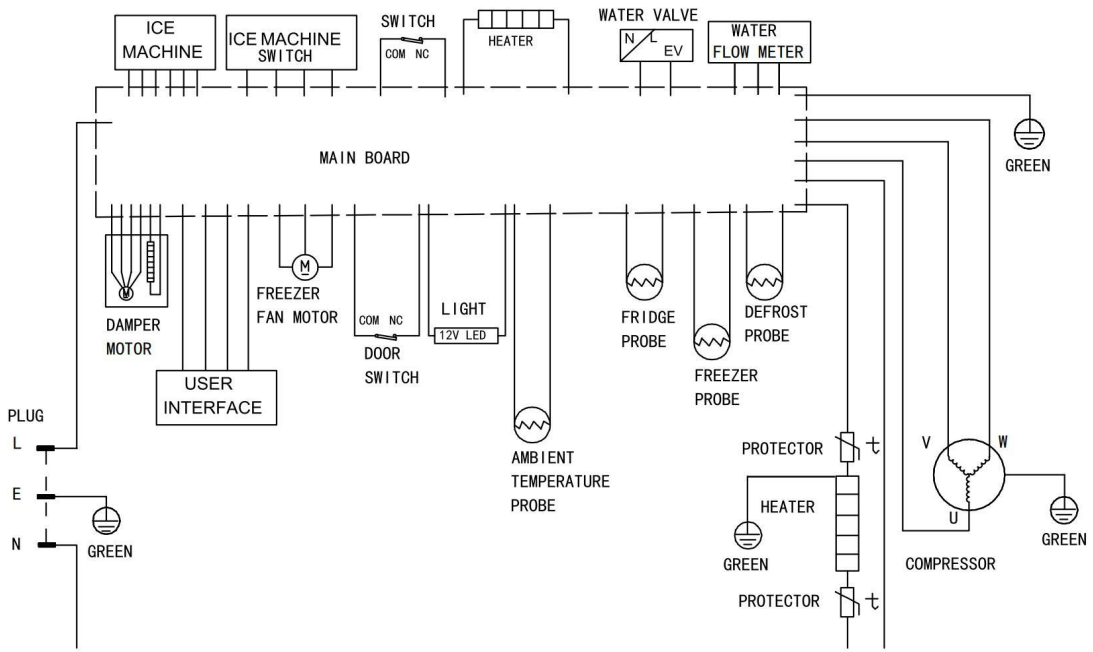

Warranty

What this limited warranty covers:
The Warranty coverage provided by Forno Appliances in this statement applies exclusively to the original Forno appliance (“Product”) sold to the consumer (“Purchaser”) by an authorized Forno dealer/distributor/retailer, purchased and installed in the United States or Canada, and which has always remained within the original country of purchase (the United States or Canada). Warranty coverage is activated on the date of the Product’s original retail purchase and has a duration of two (2) years. This warranty does not cover installation at the time of purchase or during replacement.

Warranty coverage is non-transferable. In the event of replacement of parts or of the entire product, the replacement Product (or parts) shall assume the remaining original Warranty activated with the original retail purchase document. This Warranty shall not be extended with respect to such replacement. Forno Appliances will repair or replace any component/part which fails or proves defective due to materials and/or workmanship within 2 years of the date of the original retail purchase and under conditions of ordinary residential, non-commercial use. Repair or replacement will be free of charge, including labor at standard rates and shipping expenses. Purchaser is responsible for making the Product reasonably accessible for service. Repair service must be performed by a Forno Authorized Service company during normal working hours.

Important
Retain proof of original purchase to establish warranty period. Forno’s liability on any claim of any kind, with respect to the goods and/or services provided, shall in no event exceed the value of the goods or service or part there of which has given rise to the claim.

30-Day Cosmetic Warranty
The Purchaser must inspect the product at the time of delivery. Forno warrants that the Product is free from manufacturing defects in materials and workmanship for a period of thirty (30) days from date of the original retail purchase of the Product.

This coverage includes:
- Paint blemishes
- Chips
- Macroscopic finish defects

Cosmetic warranty does NOT cover:
- Issues resulting from incorrect transport, handling and/ or installation (e.g.: dents, broken, warped or deformed structures or components, cracked or otherwise damaged glass components);
- Slight color variations on painted/enameled components;
- Differences caused by natural or artificial lighting, location or other analogous factors; > stains/corrosion/ discoloration caused by external substances and/ or environmental factors; > labor costs, display, floor, B-stock, out- of-box,“as is” appliances and demo units.

How to receive service
To receive warranty services, the Purchaser must contact the Forno Support department in order to determine the problem and the required service procedures. Troubleshooting with a customer service representative will be necessary before moving forward with the service. Model number, serial number and date of original retail purchase will be requested.

Warranty Exclusions: What Is Not Covered.
- Use of the Product in any non-residential, commercial application.
- Use of the Product for anything other than its intended purpose.
- Repair services provided by anyone other than a Forno Authorized Service agency.
- Damages or repair services to correct services provided by unauthorized parties or the use of unauthorized parts.
- Installation not in accordance with local/state/city/county fire codes, electrical codes, gas codes, plumbing codes, building codes, laws or regulations.
- Defects or damage due to improper storage of the Product.
- Defects, damage or missing parts on products sold out of the original factory packaging or from displays. > Service calls or repairs to correct an incorrect installation of the Product and/or related accessories.
- Replacement of parts/service calls to connect, convert or otherwise repair the electrical wiring and/or gas line in order to properly use the product.
- Replacement of parts/service calls to provide instructions and information on the use of the Product.
- Replacement of parts/service calls to correct issues arising from the product being used in a manner other than what is normal and customary for residential use.
- Replacement of parts/service calls due to wear and tear of components such as seals, knobs, pan supports, shelving, cutlery baskets, buttons, touch displays, scratched or broken ceramic-glass tops.
- Replacement of parts/service calls for lack of/improper maintenance, including but not limited to: build up of residues, stains, scratches, discoloration, corrosion.
- Defects and damages arising from accidents, alteration, misuse, abuse or improper installation.
- Defects and damages arising from Product transport, logistics and handling. Inspection of the product must be made at time of delivery. Following receipt and inspection, the selling dealer/delivery company must be notified of any issues arising from handling, transport and logistics.
- Defects and damages arising from external forces beyond the control of Forno Appliances, including but not limited to wind, rain, sand, fires, floods, mudslides, freezing temperatures, excessive moisture or extended exposure to humidity, power surges, lightning, structural failures surrounding the appliance and other acts of God.
- Products whose serial number has been altered/ damaged/tampered with. In no case shall Forno be held liable or responsible for damage to surrounding property, including furniture, cabinetry, flooring, panels, and other structures surrounding the Product. Forno is neither liable nor responsible for the Product if it is located in a remote area or an area where certified trained technicians are not reasonably available. Purchaser must bear any transportation and delivery costs of the Product to the nearest Authorized Service Center or the additional travel expenses of a certified trained technician

Warranty (continued)

THERE ARE NO EXPRESS WARRANTIES OTHER THAN THOSE LISTED AND DESCRIBED ABOVE, AND NO WARRANTIES, EITHER EXPRESS OR IMPLIED, INCLUDING, BUT NOT LIMITED TO, ANY IMPLIED WARRANTIES OF MERCHANTABILITY OR FITNESS FOR A PARTICULAR PURPOSE THAT SHALL APPLY AFTER THE EXPRESS WARRANTY PERIODS STATED ABOVE, AND NO OTHER EXPRESS WARRANTY OR GUARANTEE GIVEN BY ANY PERSON, FIRM OR CORPORATION WITH RESPECT TO THIS PRODUCT SHALL BE BINDING ON FORNO. FORNO SHALL NOT BE LIABLE FOR LOSS OF REVENUE OR PROFITS, FAILURE TO REALIZE SAVINGS OR OTHER BENEFITS, TIME AWAY FROM WORK, MEALS, LOSS OF FOOD OR BEVERAGES, TRAVELING OR HOTEL EXPENSES, EXPENSES TO RENT OR PURCHASE APPLIANCES, REMODELING/CONSTRUCTION EXPENSES IN EXCESS OF DIRECT DAMAGES WHICH ARE UNDENIABLY CAUSED EXCLUSIVELY BY FORNO OR ANY OTHER SPECIAL, INCIDENTAL OR CONSEQUENTIAL DAMAGES CAUSED BY THE USE, MISUSE OR INABILITY TO USE THIS PRODUCT, REGARDLESS OF THE LEGAL THEORY ON WHICH THE CLAIM IS BASED, AND EVEN IF FORNO HAS BEEN ADVISED OF THE POSSIBILITY OF SUCH DAMAGES. NOR SHALL RECOVERY OF ANY KIND AGAINST FORNO BE GREATER IN AMOUNT THAN THE PURCHASE PRICE OF THE PRODUCT SOLD BY FORNO AND CAUSING THE ALLEGED DAMAGE. WITHOUT PREJUDICE TO THE FOREGOING, PURCHASER ASSUMES ALL RISK AND LIABILITY FOR LOSS, DAMAGE OR INJURY TO PURCHASER AND PURCHASER'S PROPERTY AND TO OTHERS AND THEIR PROPERTY ARISING FROM THE USE, MISUSE, OR INABILITY TO USE THIS PRODUCT SOLD BY FORNO THAT IS NOT A DIRECT RESULT OF NEGLIGENCE ON THE PART OF FORNO THIS LIMITED WARRANTY SHALL NOT EXTEND TO ANYONE OTHER THAN THE ORIGINAL PURCHASER OF THIS PRODUCT, IS NON-TRANSFERABLE, AND STATES YOUR EXCLUSIVE REMEDY.

FORNO®

Alta Qualita

FOR

FAST SUPPORT

EMAIL AT ***INFO@FORNO.CA***

Customer Support: Call 1-866-231-8893 or email: info@forno.ca