SINK SPECIFICATIONS

SILGRANIT®II

BLANCO PERFORMA™ MEDIUM 1-3/4 DOUBLE BOWL Undermount

Model 441315

FEATURED MODEL

441315 Medium 1-3/4 Bowl, 10" bowl depths, TRUFFLE

ADDITIONAL MODELS

441309 Medium 1-3/4 Bowl, 10" bowl depths, METALLIC GRAY

441310 Medium 1-3/4 Bowl, 10" bowl depths, WHITE

441311 Medium 1-3/4 Bowl, 10" bowl depths, BISCUIT

441312 Medium 1-3/4 Bowl, 10" bowl depths, ANTHRACITE

441313 Medium 1-3/4 Bowl, 10" bowl depths, CAFE BROWN

441314 Medium 1-3/4 Bowl, 10" bowl depths, BISCOTTI

441474 Medium 1-3/4 Bowl, 10" bowl depths, CINDER

FEATURES

- New low divide adds functionality and convenience
- Reversible shape make any specification easy
- Divider height: 6" from bowl bottom (4" from rim)
- Overall: 33" x 19"
- Required outside cabinet: 36"
- 80% solid granite
- Heat resistant up to 536°F
- Unsurpassed cleanability backed by industry leading 7 patents!
- Resistant to scratches, stains and all household acids and alkali solutions
- Template provided with approximate 1/8" reveal
- Undermount clips NOT included
- Limited lifetime warranty

OPTIONAL ACCESSORIES

Cutting Board: 227346

Sink Grids: 226828 (large bowl), 226830 (small bowl)

CODE/STANDARDS COMPLIANCE

ANSI Z124.6-97

IAPMO/UPC listed

WARRANTY

BLANCO'S SILGRANIT II Series sinks feature a LIMITED LIFETIME WARRANTY to be free of all manufacturing defects under normal use. See our complete warranty for details.

While BLANCO endeavors to provide accurate information, all dimensions are nominal, cannot be guaranteed, and are subject to change or cancellation. BLANCO assumes no responsibility for use of superseded or voided specifications.

JOB INFORMATION

Job Name: _____

Contact: _____

Date Specified: _____

Specifier: _____

Contractor: _____

NOMINAL DIMENSIONS

Model 441315 shown

OVERALL	CUT OUT SIZE	BOWL DEPTHS LARGE	BOWL DEPTHS SMALL	DRAIN
33" x 19"	Template provided with approximate 1/8" reveal	10"	10"	3-1/2"

DXF cutout templates available on our website.

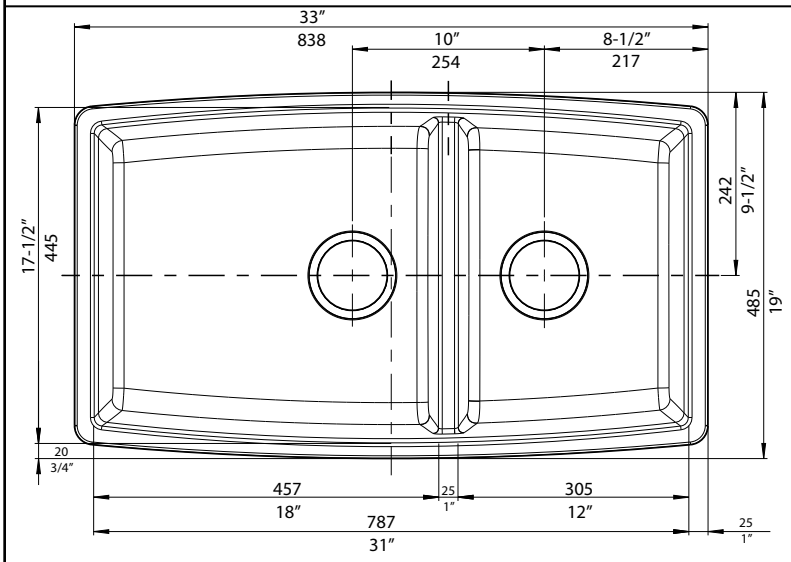

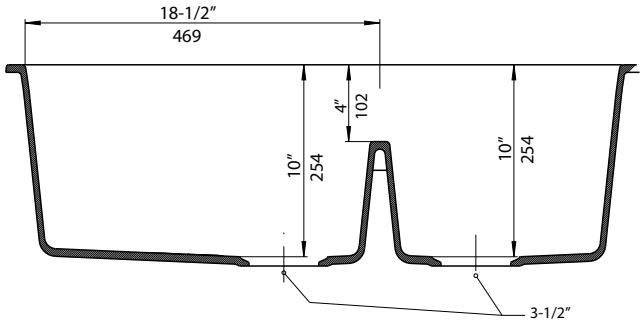

BLANCO AMERICA

800.451.5782

www.blancoamerica.com

© 2013 BLANCO AMERICA