SPECIFICATION SHEET
E64E SERIES

SPECIFICATIONS

Model	*E64E (30" and 36")*	*E64E (42" and 48")*
Volts	120 VAC	120 VAC
Hz	60	60
Amps (without blower)	0.8	1.3
Ducting Size	10" round	10" round
2 LED modules	120 V, 5.5 W	120 V, 5.5 W
Warranty	1 year	1 year

DIMENSIONS

Models:
E64E30SSLC
E64E36SSLC
E64E42SSLC
E64E48SSLC

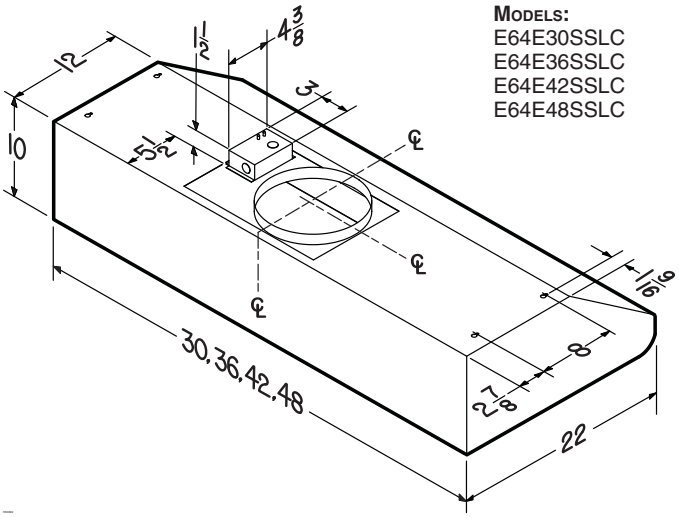

NOTE: Dimensions shown are in inches.

Broan-NuTone Canada ULC, Mississauga, Ontario www.broan.ca 1-888-882-7626

Project	REMARKS
Location	
Model No.	
Qty.	
Submitted by	
Date	

BROAN® Elite
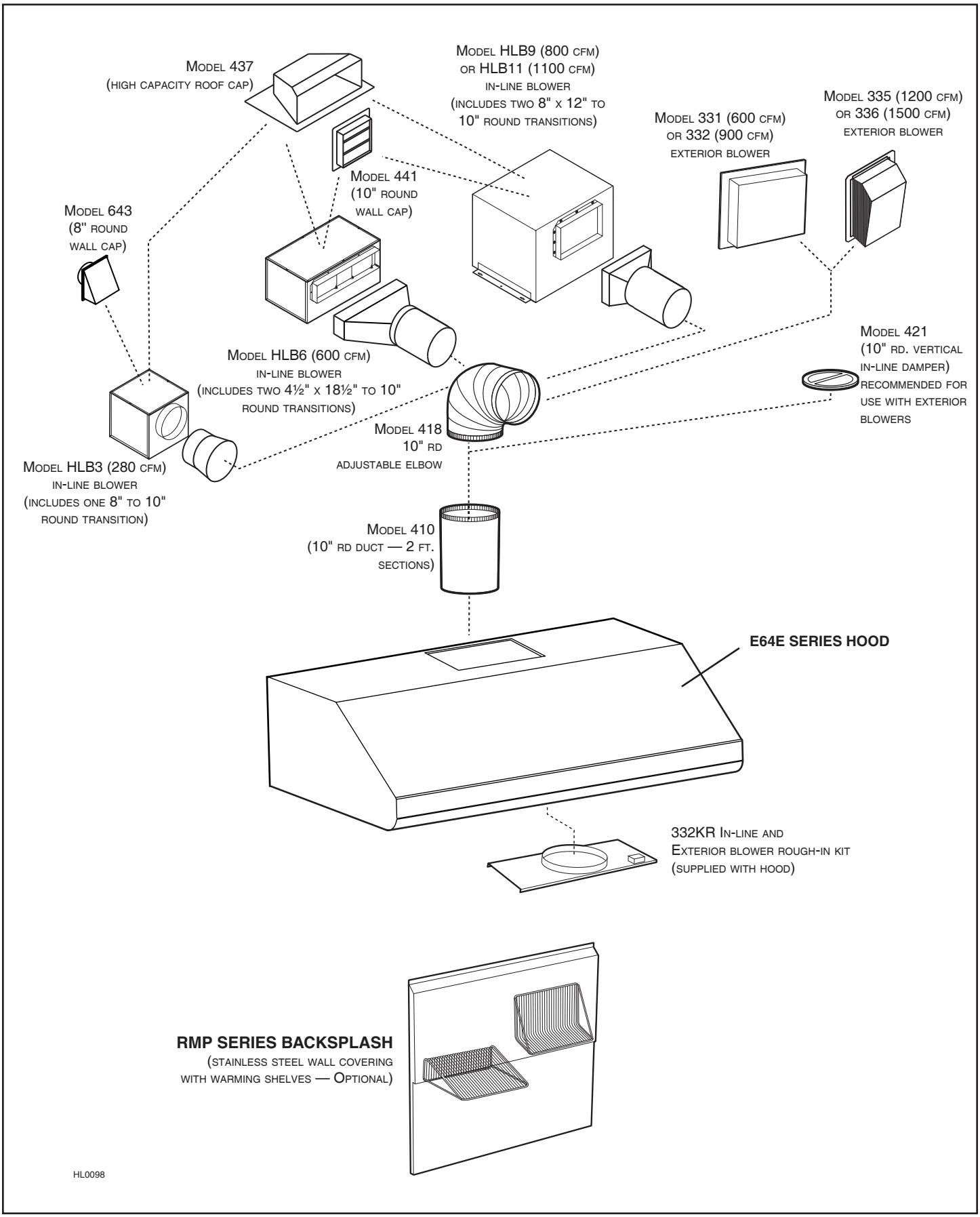
SPECIFICATION SHEET
E64E SERIES